Isuzu Dmax 2021+ & Mazda BT50 2021+ fitted with a Roll R Cover part numbers starting with DM4 & MBT4. Rear of the ute tub guidance on the drilling points.

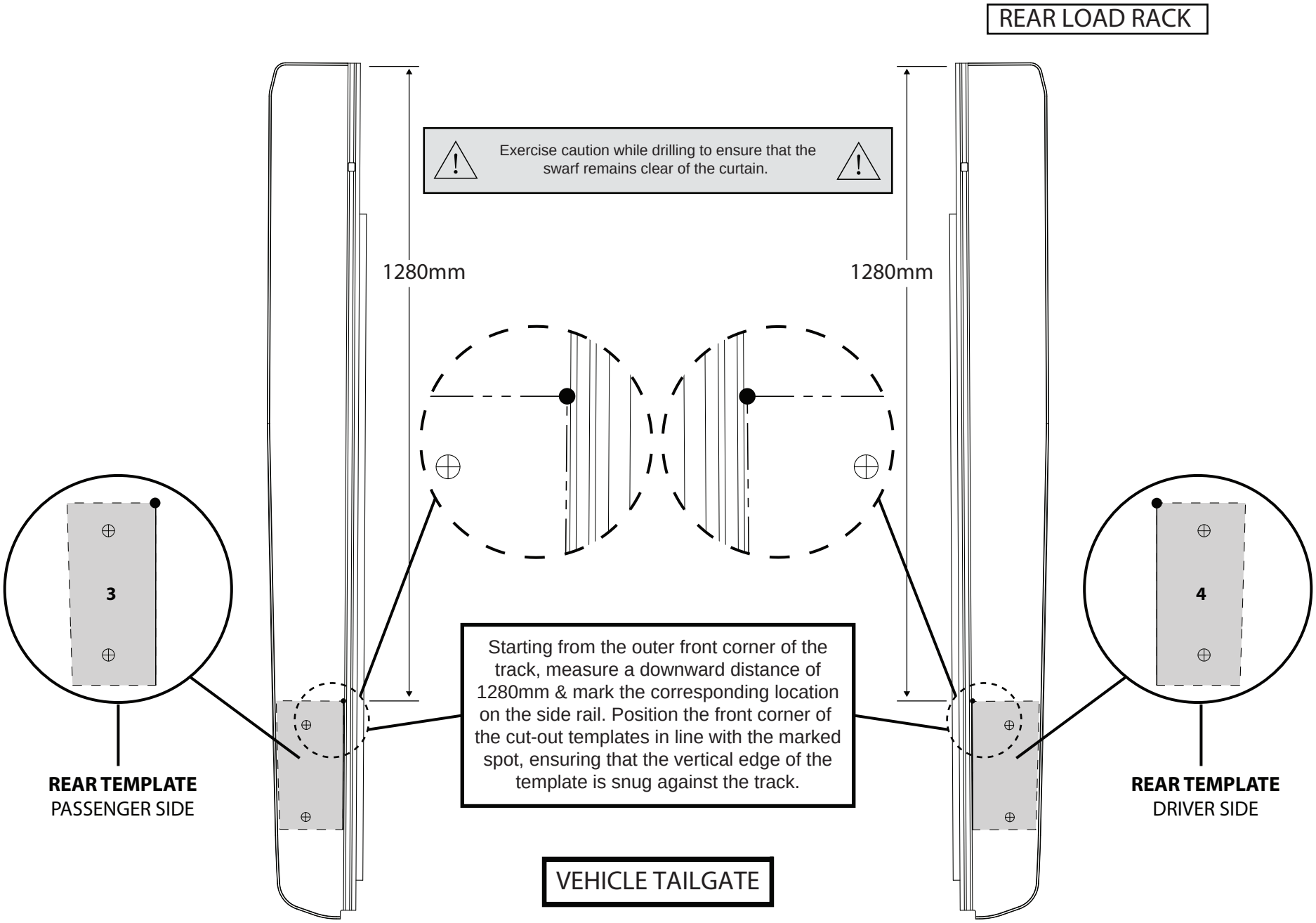

Isuzu Dmax 2021+ & Mazda BT50 2021+ fitted with a Roll R Cover part numbers starting with DM4 & MBT4. Rear of the ute tub guidance on the drilling points.

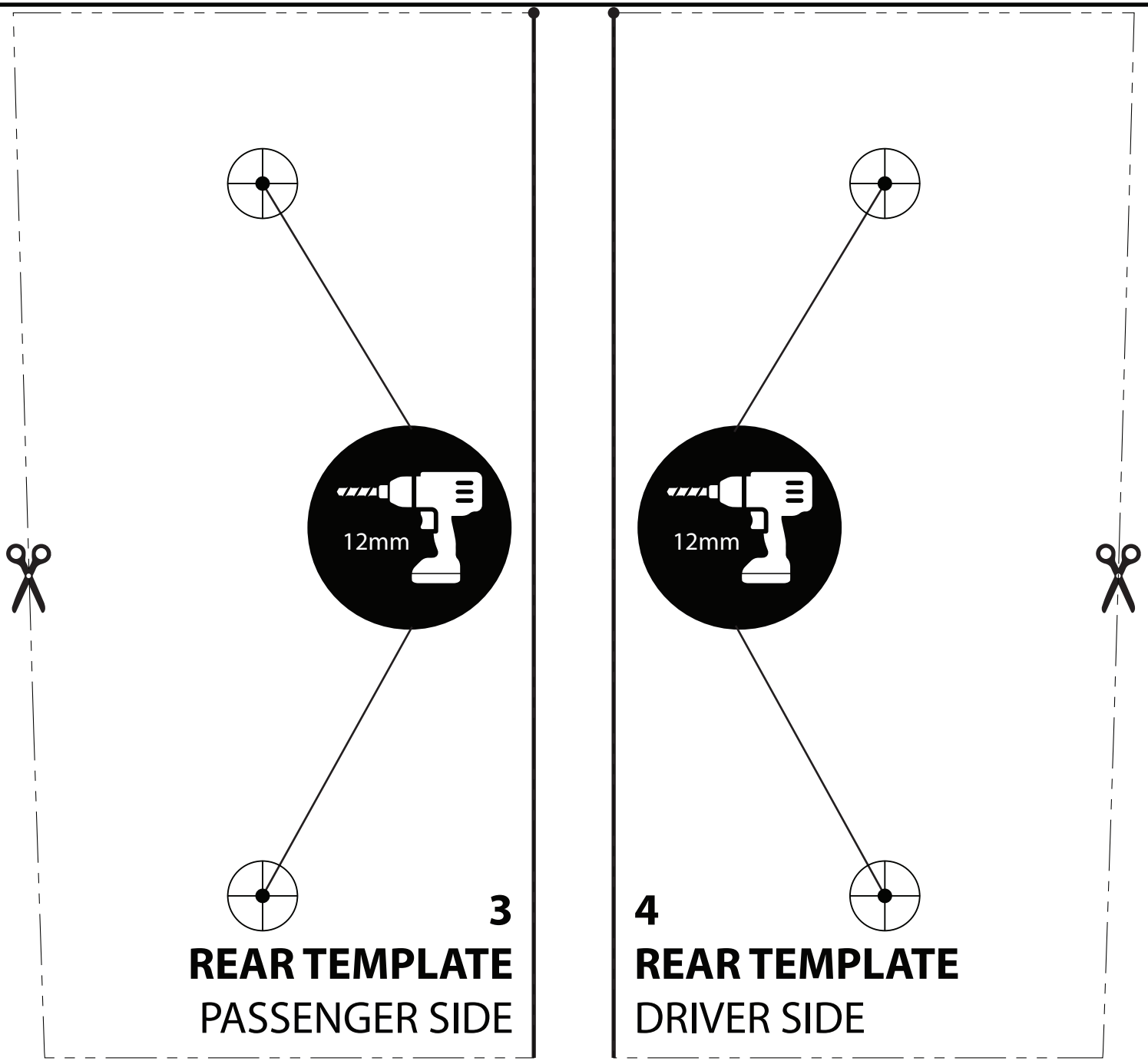

Haval GWM Cannon ute fitted with a Roll R Cover part numbers starting with GWM4.
Rear of the ute tub guidance on the drilling points.

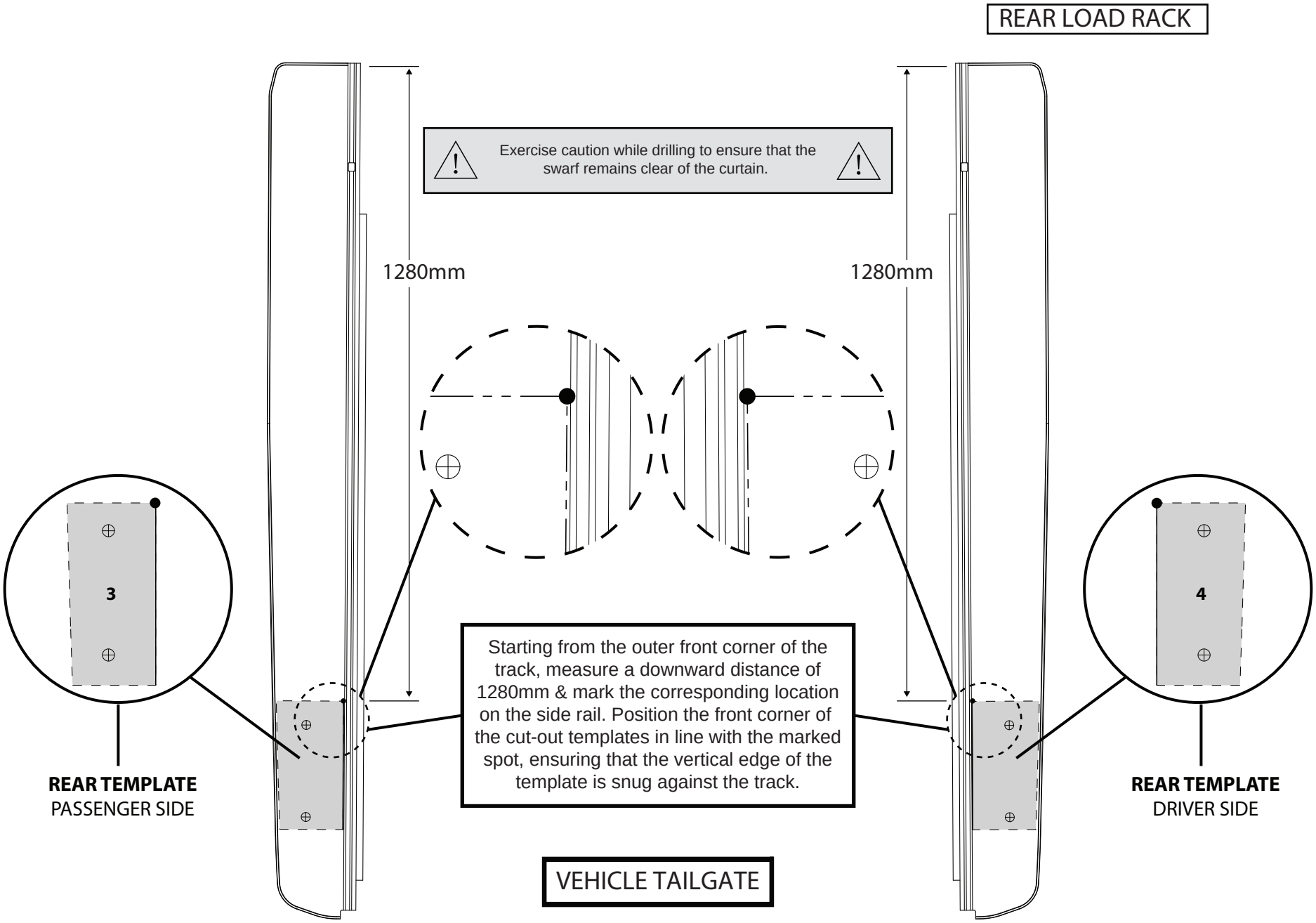

Haval GWM Cannon ute fitted with a Roll R Cover part numbers starting with GWM4.
Rear of the ute tub guidance on the drilling points.

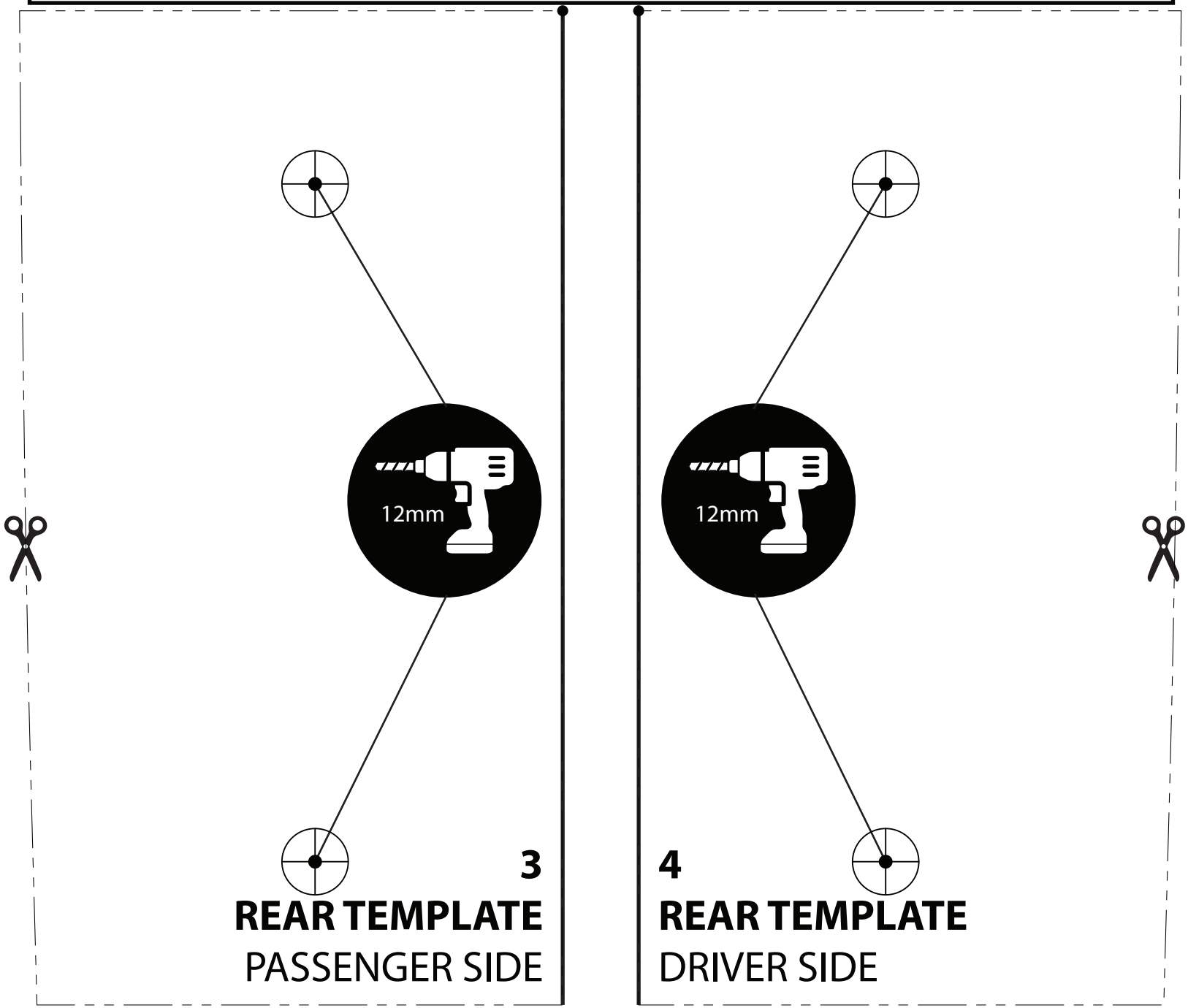

Toyota Hilux A Deck 2016+ ute fitted with a Roll R Cover part numbers starting with H4.
Rear of the ute tub guidance on the drilling points.

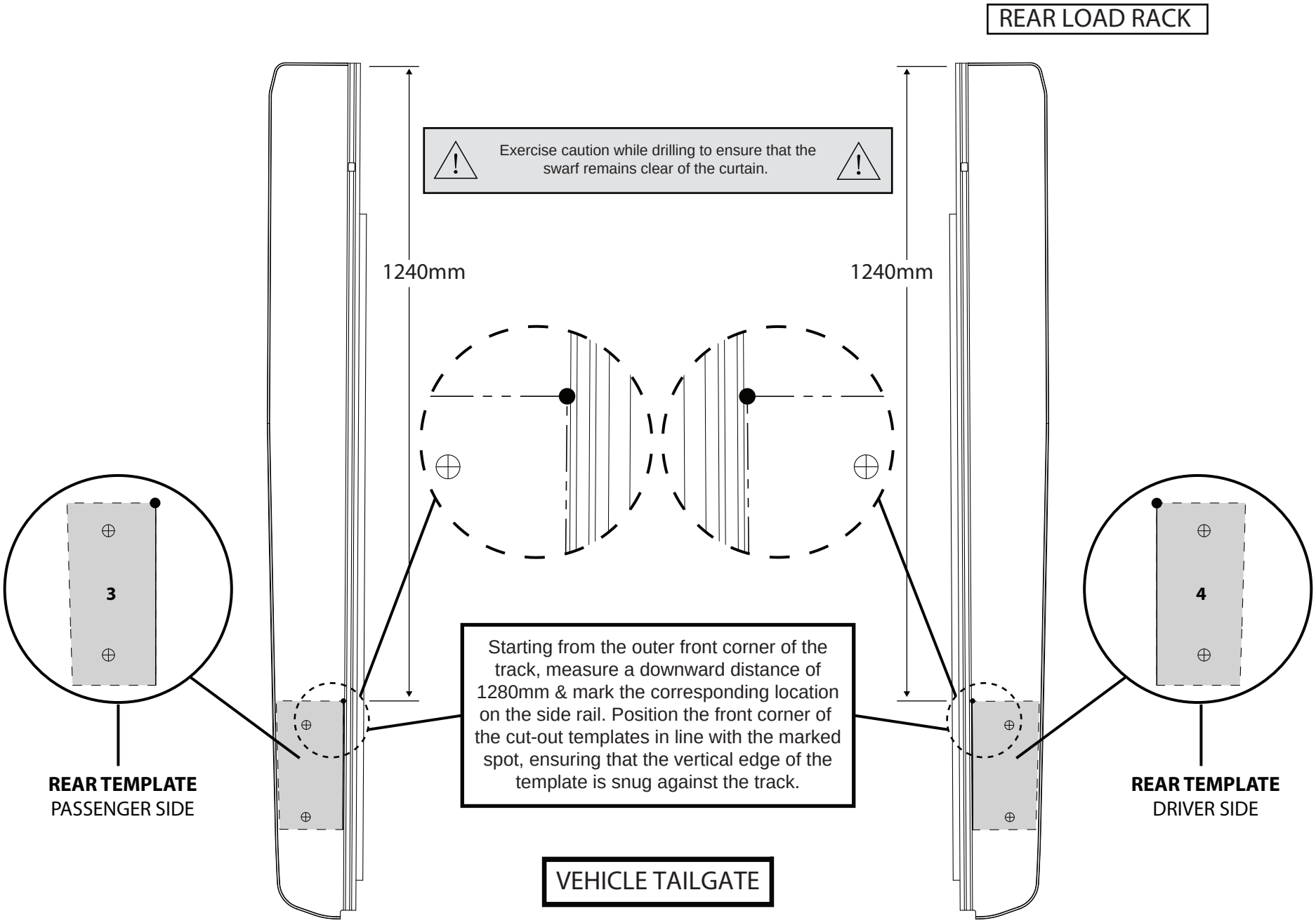

Toyota Hilux A Deck 2016+ ute fitted with a Roll R Cover part numbers starting with H4.
Rear of the ute tub guidance on the drilling points.

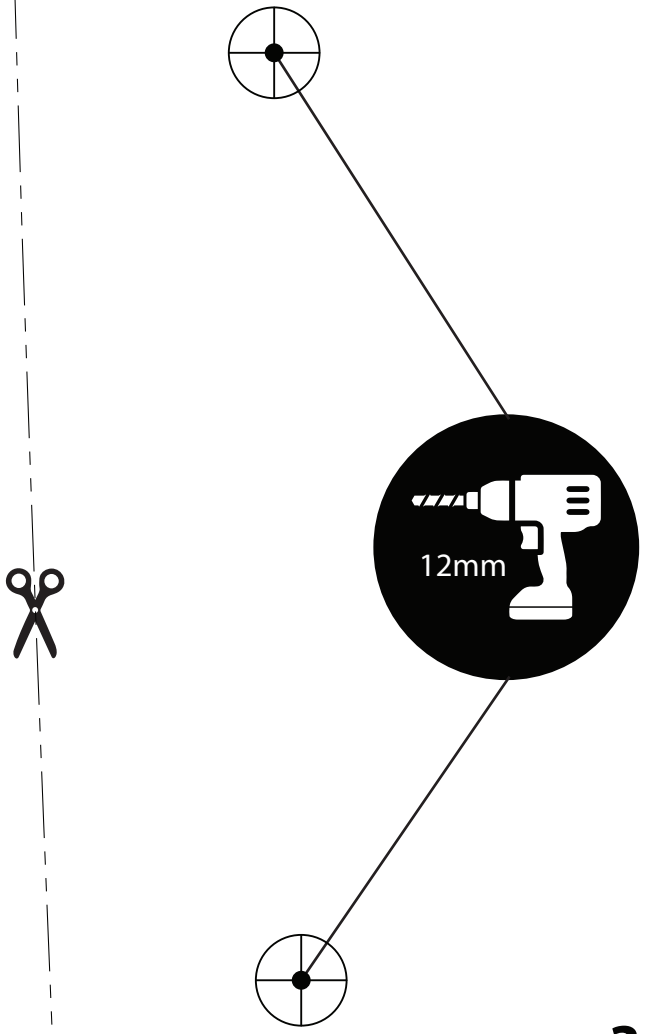

3

REAR TEMPLATE

PASSENGER SIDE

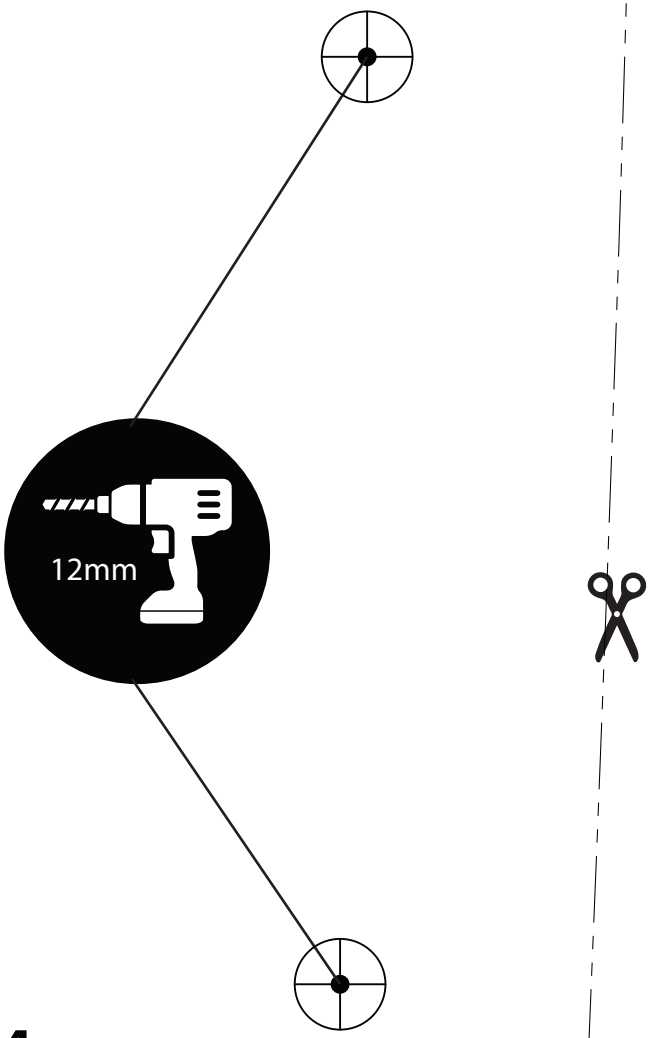

4

REAR TEMPLATE

DRIVER SIDE

Toyota Hilux J Deck 2016+ ute fitted with a Roll R Cover part numbers starting with HJ4. Rear of the ute tub guidance on the drilling points.

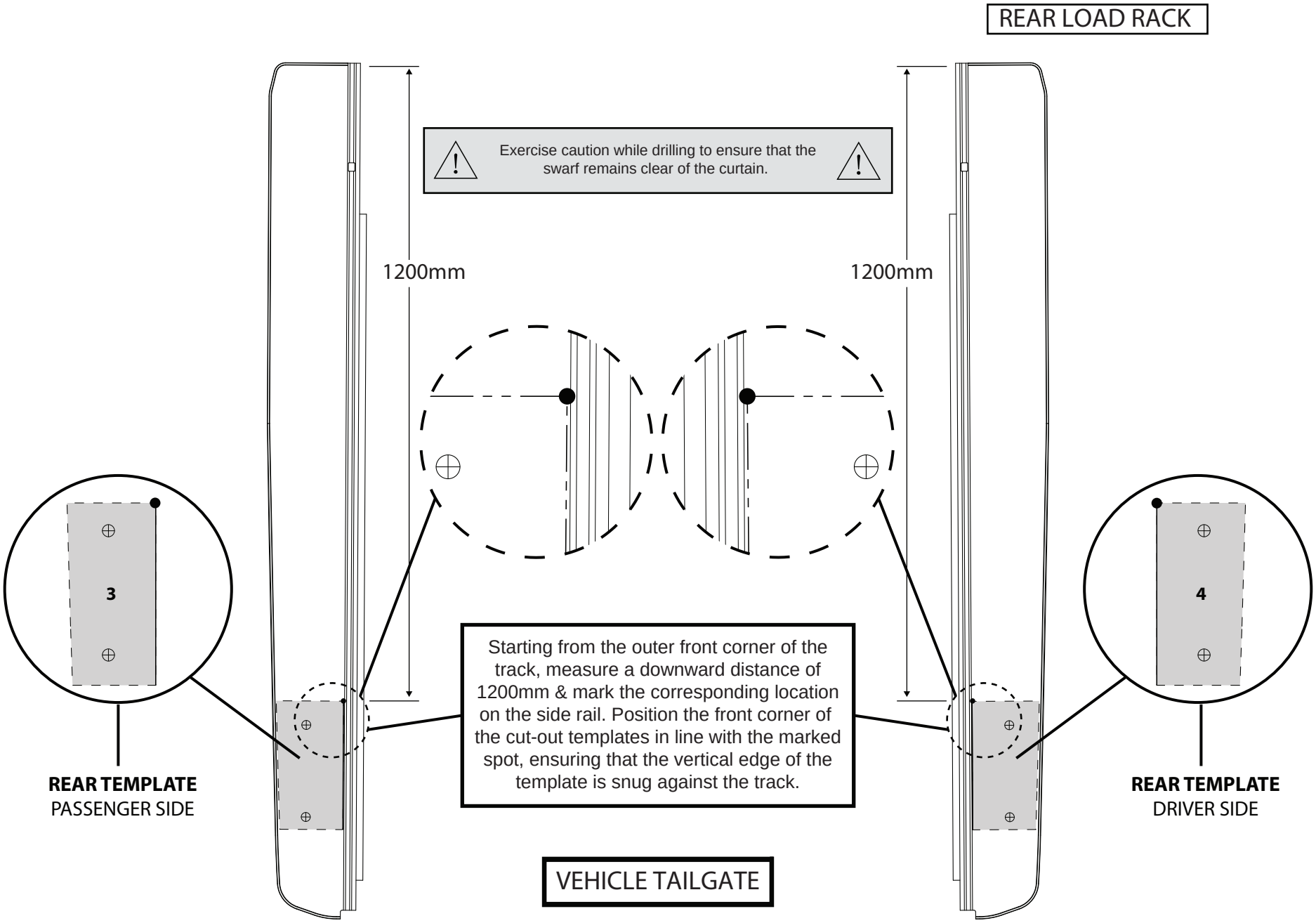

Toyota Hilux J Deck 2016+ ute fitted with a Roll R Cover part numbers starting with HJ4. Rear of the ute tub guidance on the drilling points.

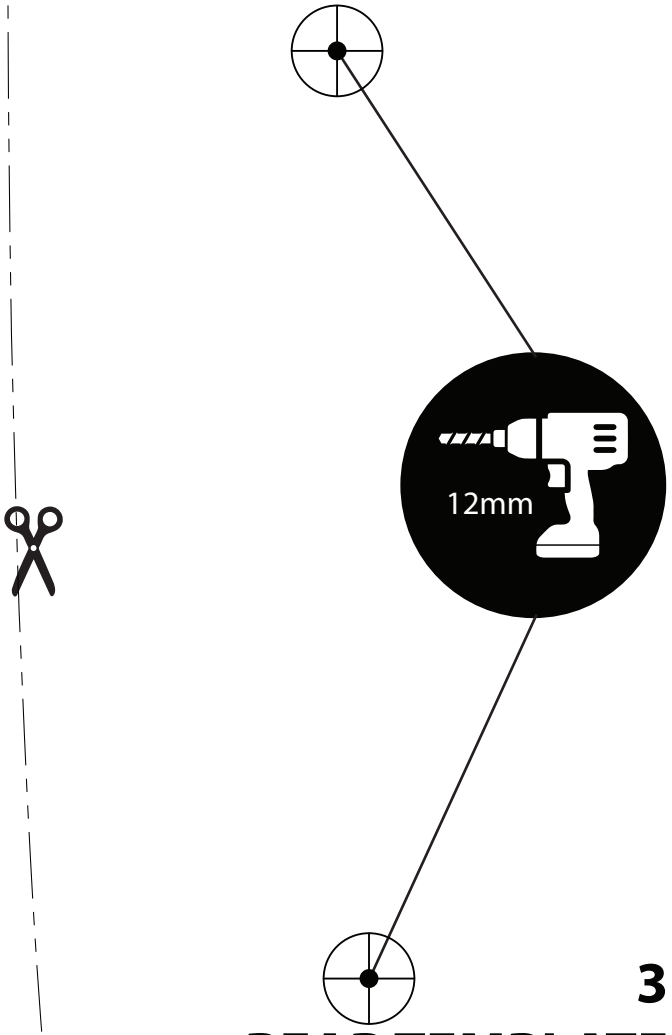

3

REAR TEMPLATE

PASSENGER SIDE

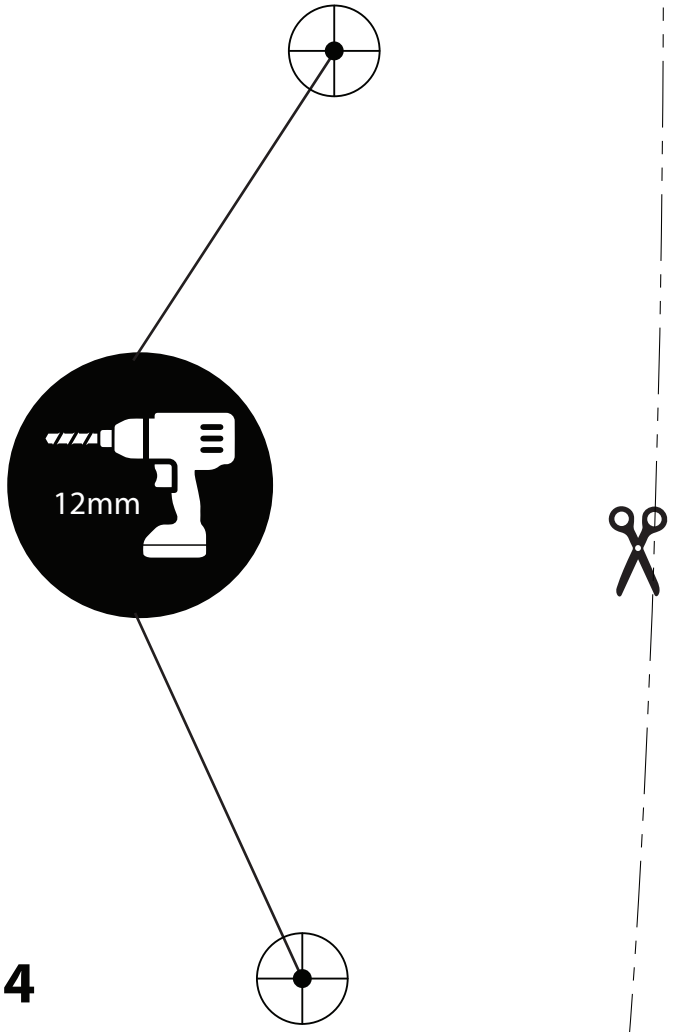

4

REAR TEMPLATE

DRIVER SIDE

LDV T60 ute fitted with a Roll R Cover part numbers starting with LD4.
Rear of the ute tub guidance on the drilling points.

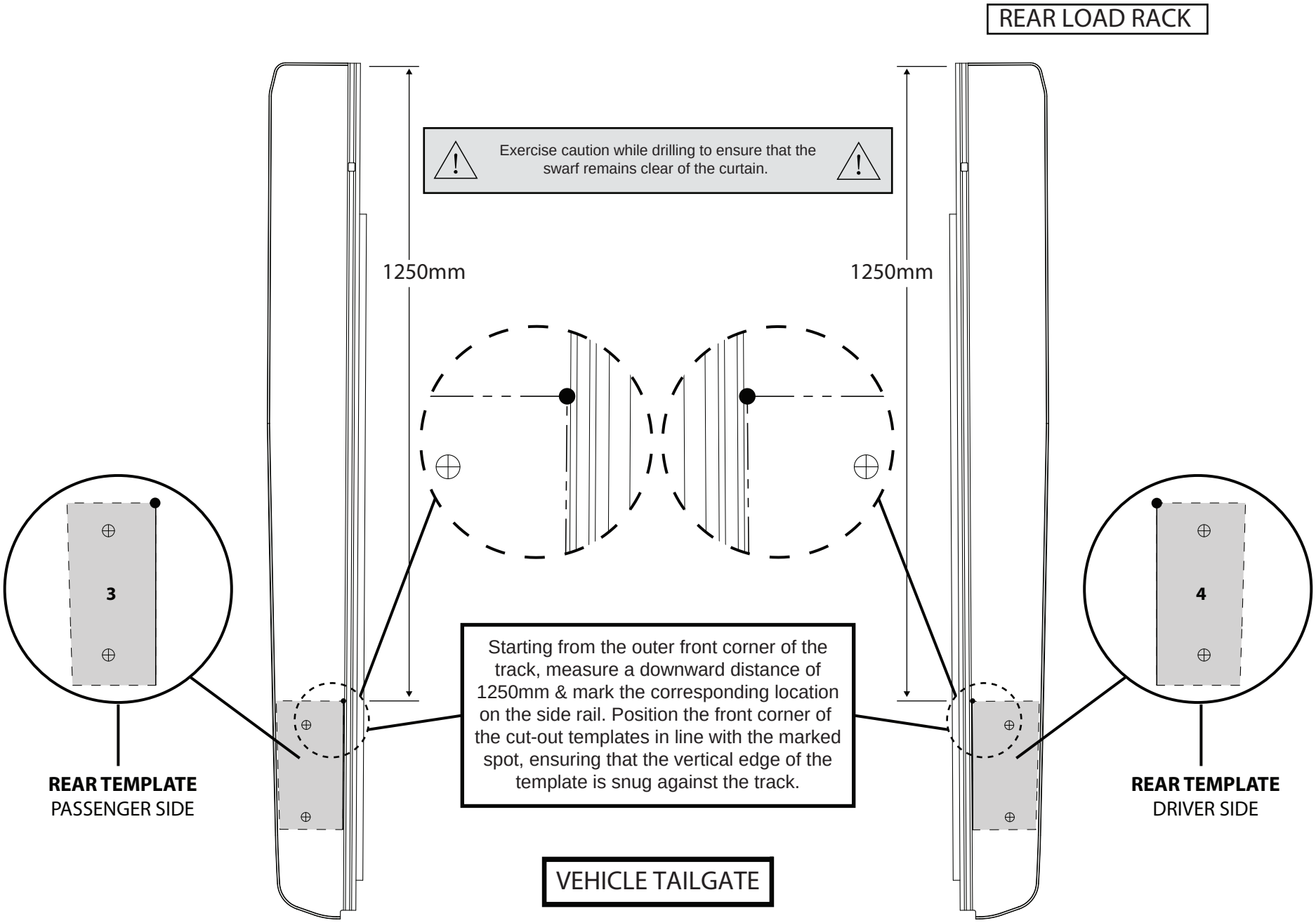

LDV T60 ute fitted with a Roll R Cover part numbers starting with LD4.
Rear of the ute tub guidance on the drilling points.

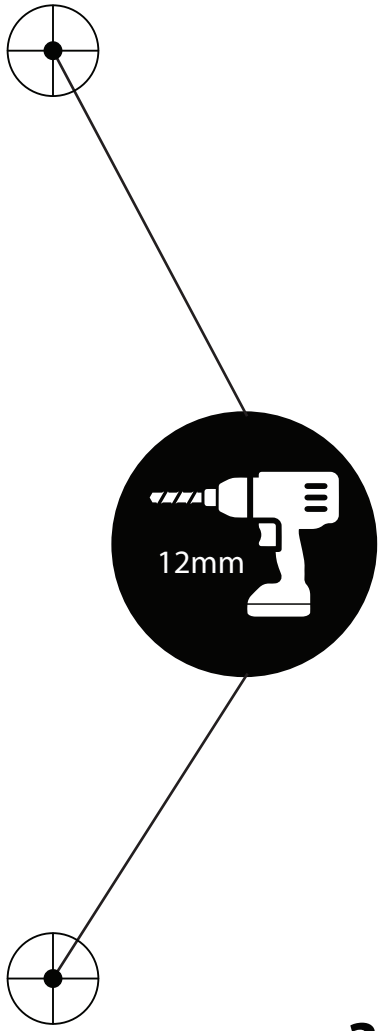

3

REAR TEMPLATE

PASSENGER SIDE

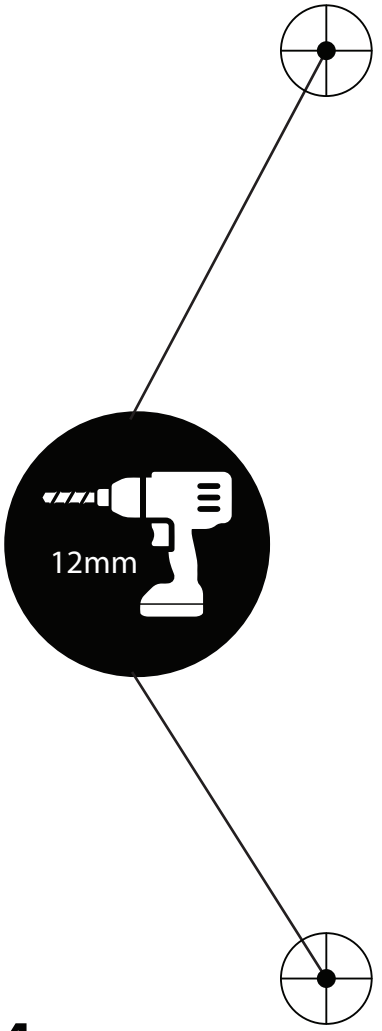

4

REAR TEMPLATE

DRIVER SIDE

Nissan Navara 2020+ ute fitted with a Roll R Cover part numbers starting with NN4.
Rear of the ute tub guidance on the drilling points.

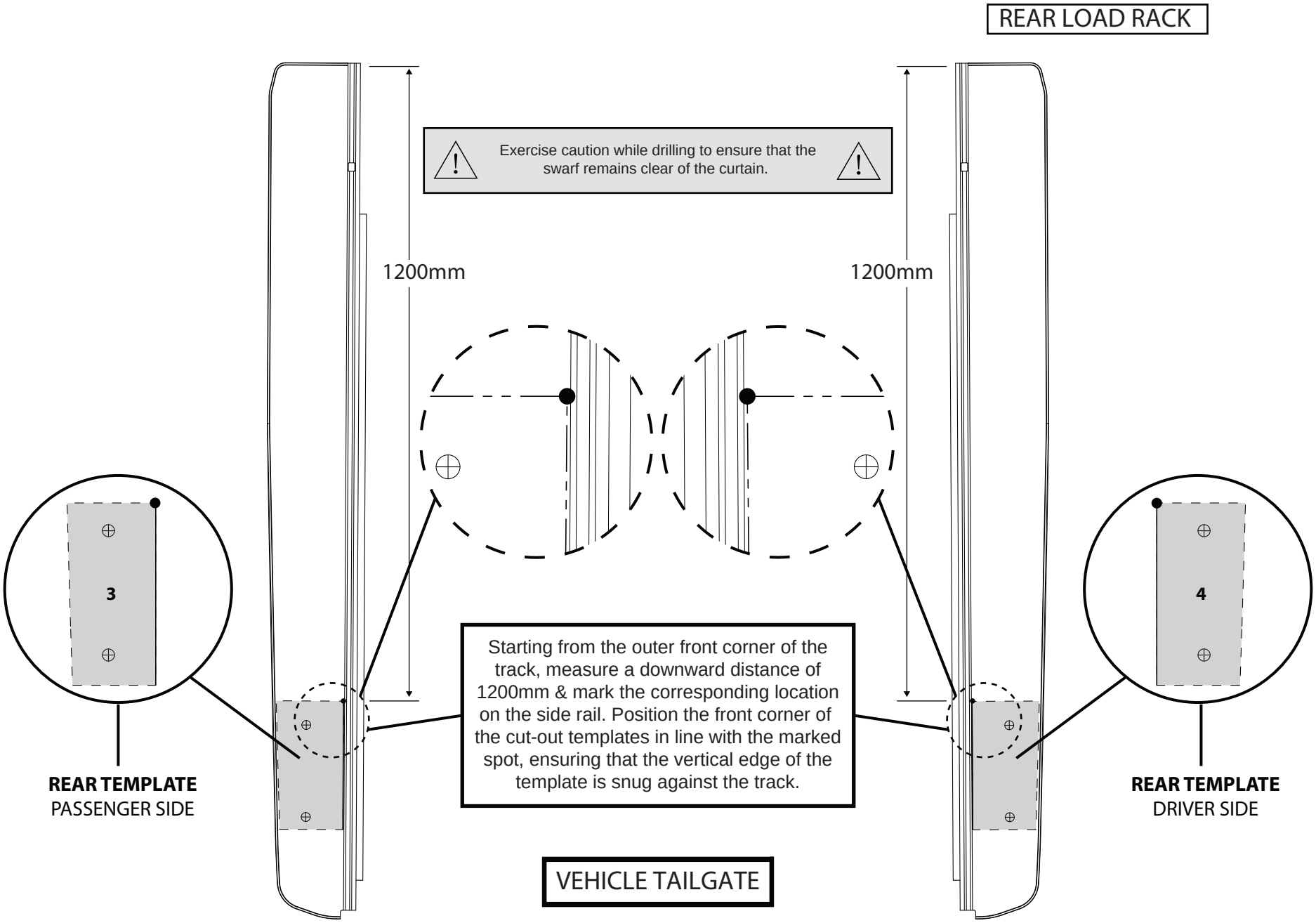

Nissan Navara 2020+ ute fitted with a Roll R Cover part numbers starting with NN4.
Rear of the ute tub guidance on the drilling points.

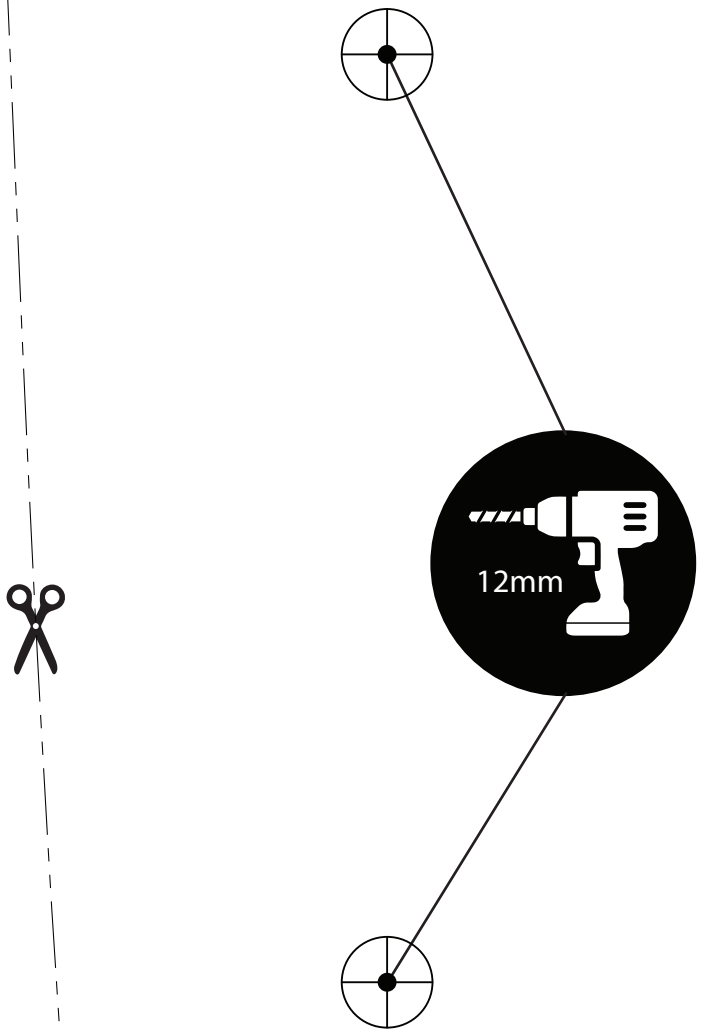

3

REAR TEMPLATE

PASSENGER SIDE

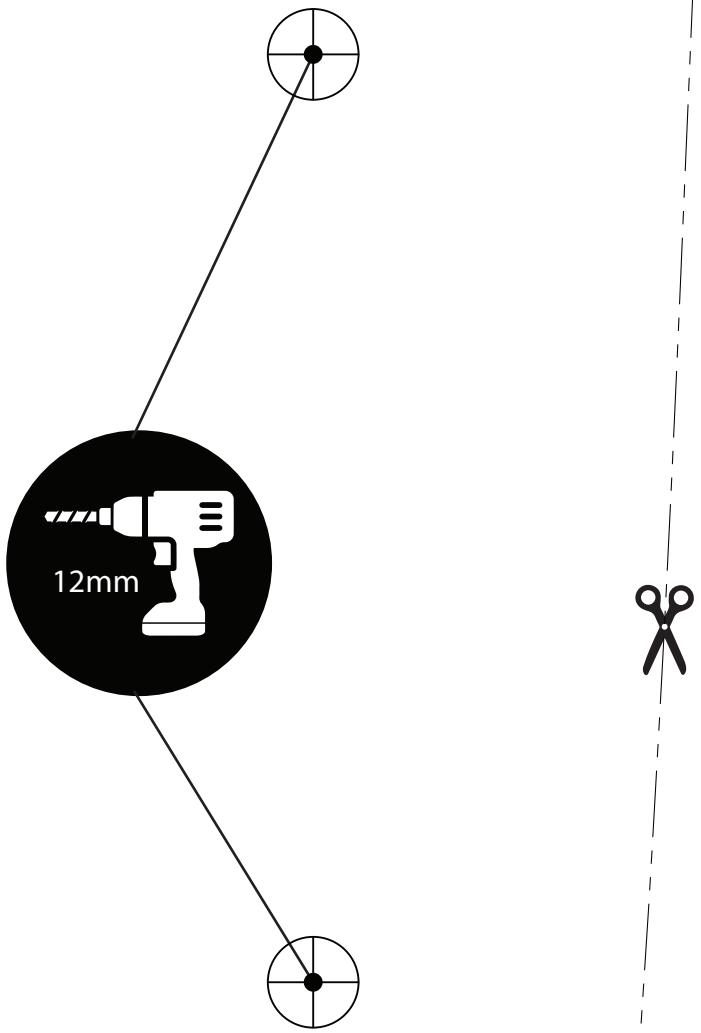

4

REAR TEMPLATE

DRIVER SIDE

WWW.HSPUTELIDS.COM

Part No: RLRRC

INSTALLATION INSTRUCTIONS

LOAD Rack to suit Roll R Cover
(REAR OF UTE TUB)

This instruction may refer to only one side of the vehicle or one side of a two-part component; repeat the steps for the other side where necessary.
All illustrations are for reference only and may not correspond to your specific vehicle.

Application list:
Haval GWM Cannon ute, LDV T60, Isuzu Dmax 2021+, Mazda BT50 2021+, Nissan Navara 2020+, Toyota Hilux A & J Deck 2016+.

INSTALLATION TIME: 90minutes (Approximately)

IMPORTANT	• Do not exceed load limit indicated by manufacture. • If contact with volatile chemicals occur, clean bars with mild detergent and water solution
Care Instructions	• Read Instructions fully before commencing installation. • Clean with a mild detergent and water solution • Do not use abrasive cleaners or solvents • Refer to manufactures instructions applicable to power drill. • Protect surface against scratches during installation process.
Maintenance	Refer to Maintenance instructions.
Tools Required	• Pen / Marker • Soapy water solution • Allen Key set • Screw driver • Trim Removal Tool • Scissors & Knife • Spanner & Socket • Tape measure

PERSONAL PROTECTIVE EQUIPMENT:

Rubber Gloves **Goggles** **Hearing Protection**

BOX CONTENTS

PART NO. LR-AE001-1466mm (LOAD RACK CROSS BAR) Qty - 1

PART NO. S2.5-DC-RE-007-1550mm (Cross Bar Rubber) Qty - 1

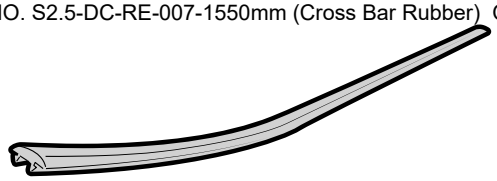

PART NO. LR-RE-001 1500mm (LADDER RACK channel insert seal) Qty - 2

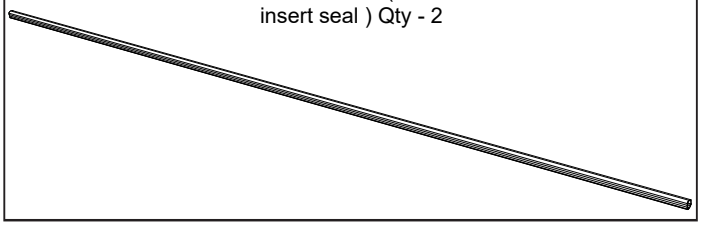

PART NO. LR-ASS-008 LEG Qty - 2

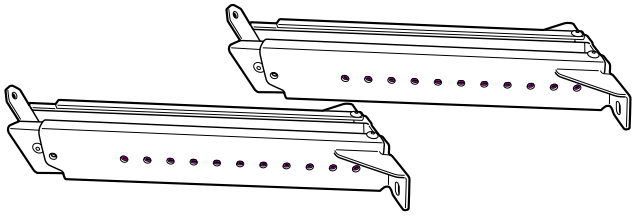

Pack 1

LR-PI-001

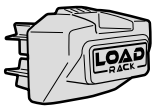

END CAP
Qty - 2

SELF DRILLING SCREW
Qty - 2

M8 HEX NUT
Qty - 8

M8 SPRING WASHER
Qty - 8

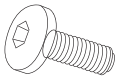

M8x20mm H5 Allen head,
Qty-8

M8x25mm H5 Allen head, with spring washer & mudguard flat Washer
Qty-4

M6x12mm SOCKET HEAD BOLT
Qty - 4

LR-SM-001

CHANNEL NUT
Qty - 2

S5 ALLEN KEY

Qty - 1

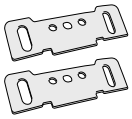

LR-FG-005 Foam Foot PAD
Qty - 2

Pack 4

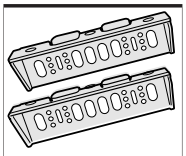

LR-ASS-007 Sleeve RMB
Qty - 2

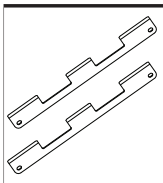

LR SPACER
Qty - 2

M8x25mm H5 Allen head, with spring washer & mudguard flat Washer
Qty-4

SELF DRILLING SCREW
Qty - 20

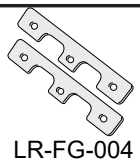

LR-FG-004 Foam Sleave PAD
Qty - 2

The load rack cross bar has a wide and a narrow face.

1. On the wide face, use the rubber molding (S2.5-DC-RE-007) and push it into the channel of the cross bars. Ensure it is flush with each end, avoiding any stretching of the rubber molding.

2. On both narrow faces, use the rubber molding (LR-RE-001) and push it into the channel of the cross bars. Ensure it is flush with each end, avoiding any stretching of the rubber molding.

3. Trim any excess rubber molding that hangs out

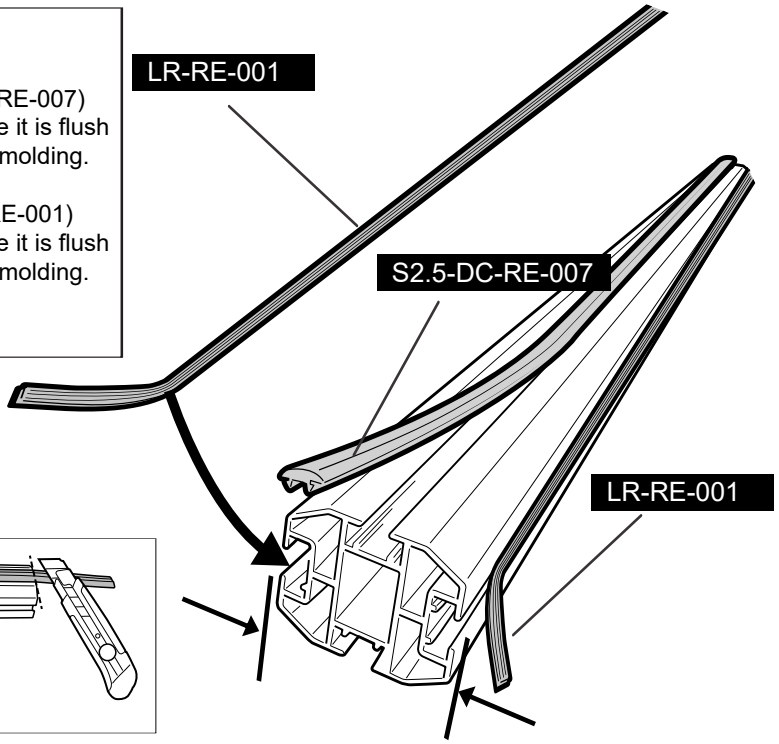

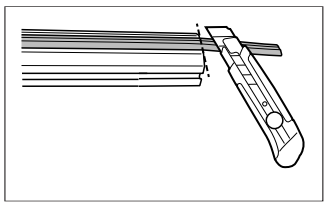

Turn the cross bar around so that the wide face without rubber molding is facing you

a. Feed 2 channel nuts (LR-SM-001) into the indicated channel.
b. In the indicated orientation, push end caps (LR-PI-001) all the way in to the extrusions both ends.
c. Using the provided self-drilling screw, carefully secure the end cap into position by drilling through the end cap plastic tab and into the cross bar at the indicated location.

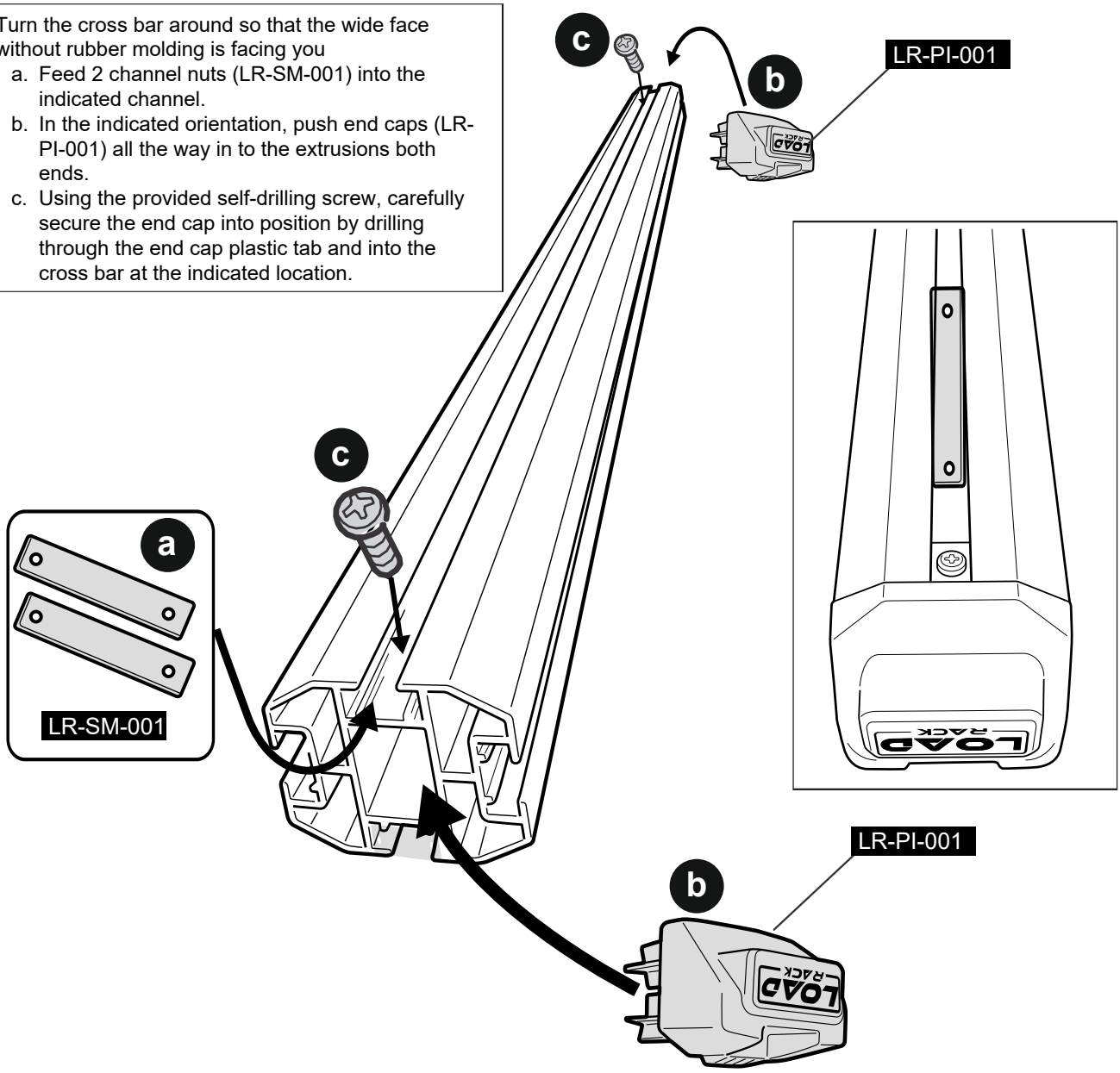

The upright legs (LR-ASS-008 LEG) of the ladder racks are adjustable. When assembled along with the cross bar on top of the ute tub or roll top, **they range from a minimum height of 450mm to a maximum height of 700mm.**

As a guide, measure from the top of the ute tub's headboard to the center height of the ute cabin. Use this measurement to determine how much higher you want the top of the rack to sit above the cabin roof, noting that the legs can be adjusted in **25mm** increments plus/minus.

It is recommended, but not necessary, to set your height at this point. Once you have chosen the desired height, lock it into place by following these steps:

a. On the outer sleeve of the leg, choose the top holes as indicated. Feed the supplied M8x20mm Allen head bolt through the holes of both sleeves of the uprights. Secure it in place using an M8 spring washer and an M8 nut.
b. On the inner sleeve of the leg, choose the bottom holes as indicated. Feed the supplied M8x20mm Allen head bolt through the holes of both sleeves of the uprights. Secure it in place using an M8 spring washer and an M8 nut

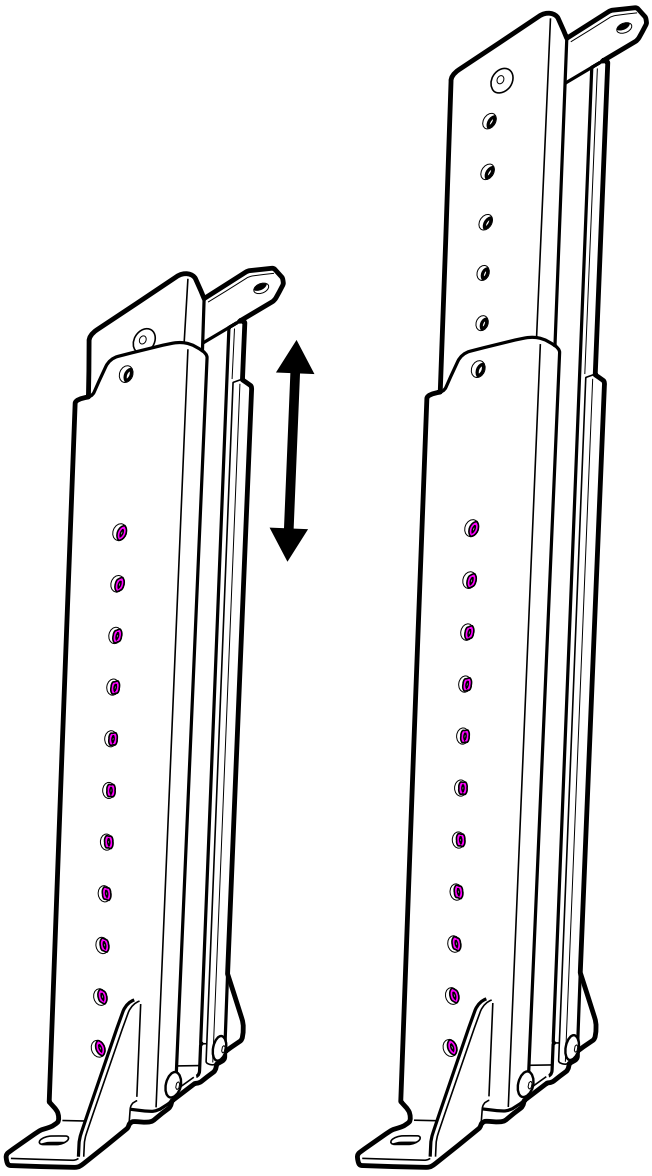

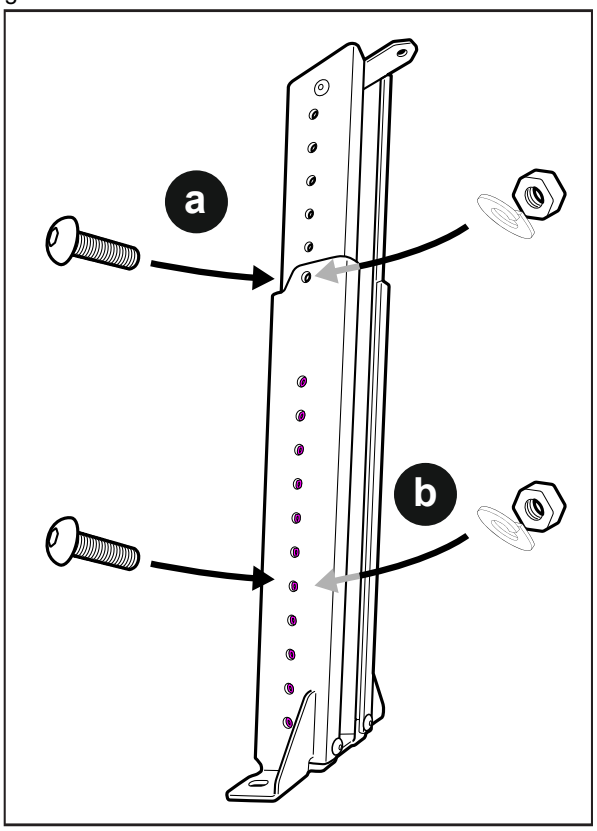

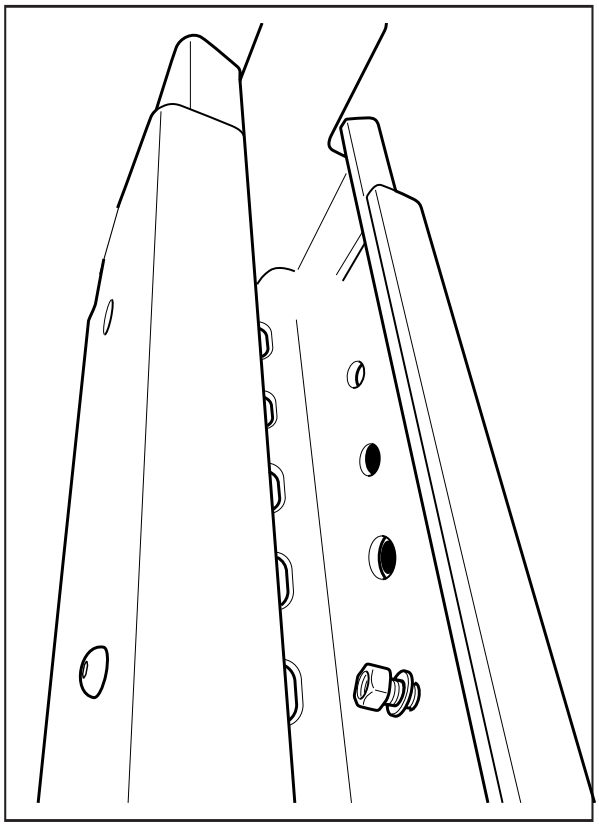

When assembled with the crossbar on top of the ute tub or roll top, the height will range from a minimum of 450mm to a maximum of 700mm, increasing in 25mm increments from the lowest height.

Using the foam pad (LR-FG-005 Foam Foot PAD), apply it to the base of the leg as indicated

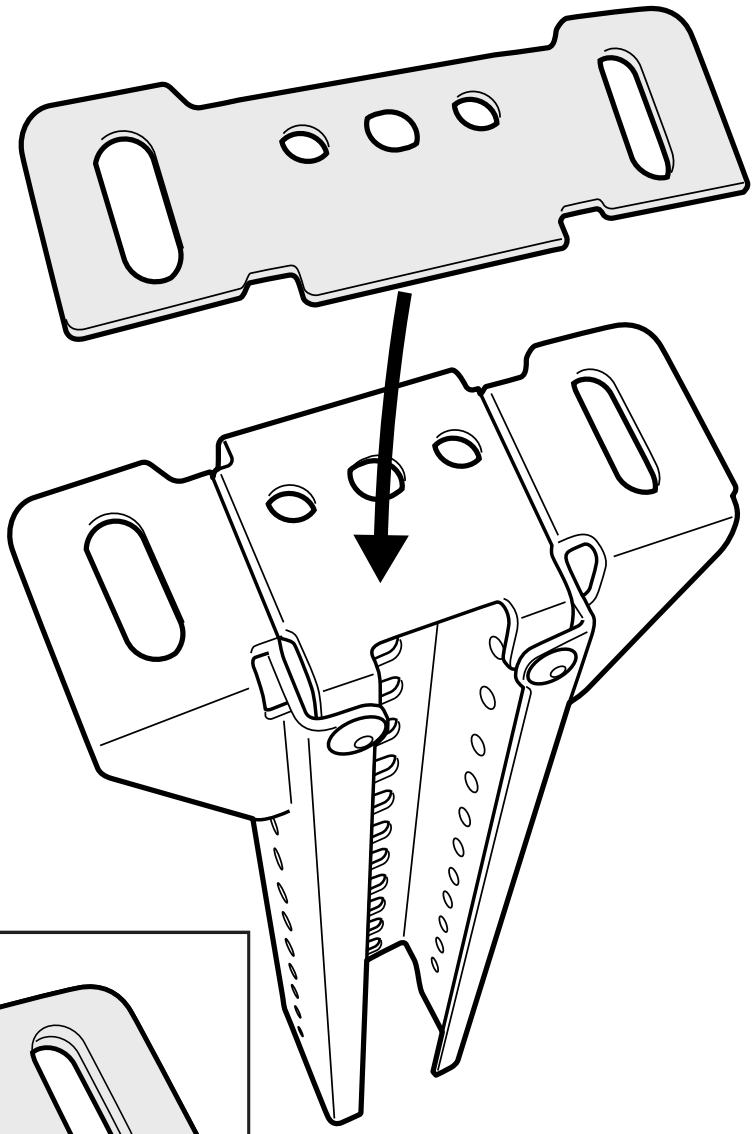

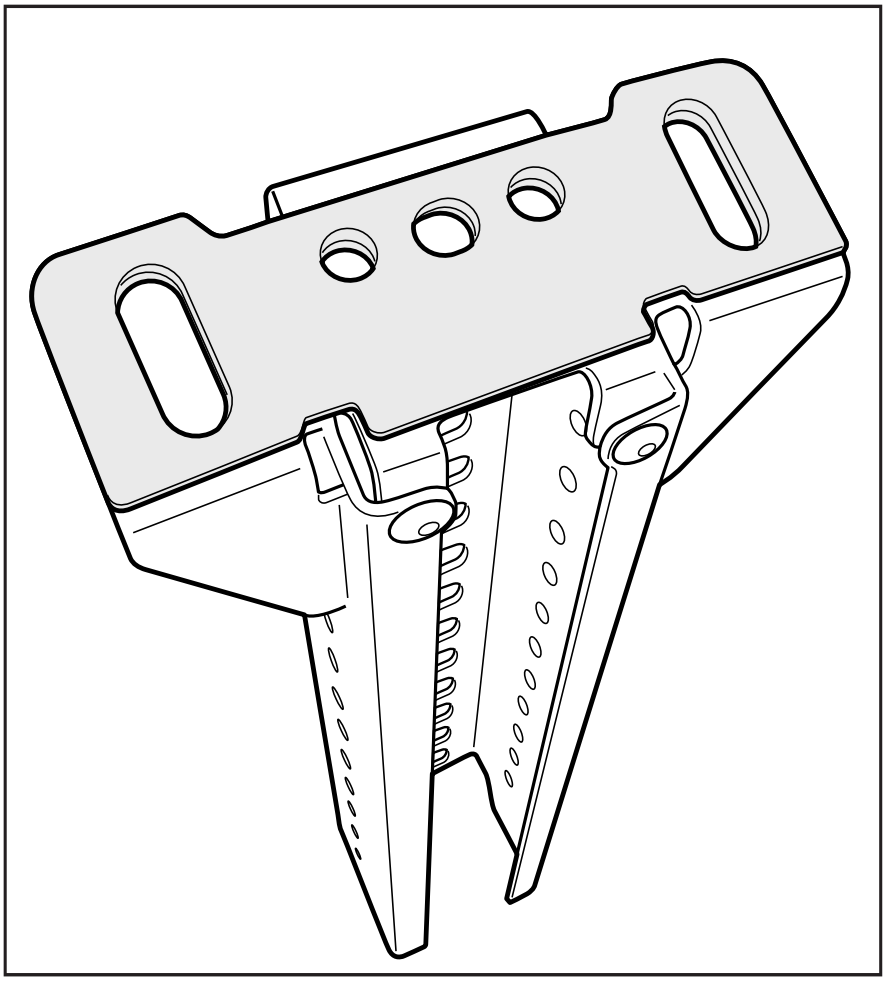

IF YOUR ROLL R COVER IS NOT FITTED TO THE VEHICLE PLEASE SKIP NEXT TWO STEPS

ROLL R COVER PREPERATION

1. Loosen and remove all three clamps or any bolts that are securing the clamp bracket of the roll covers to the ute tub.
2. Take out the drainage point from the canister.

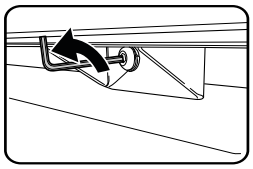

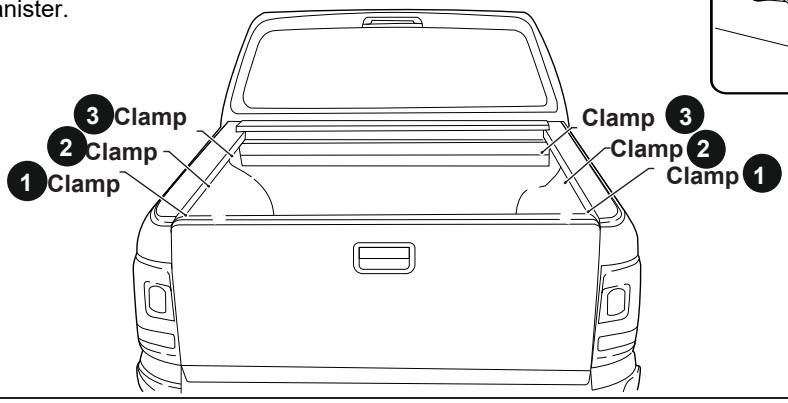

With aid Remove Roll-R-Cover unit from the ute tub.

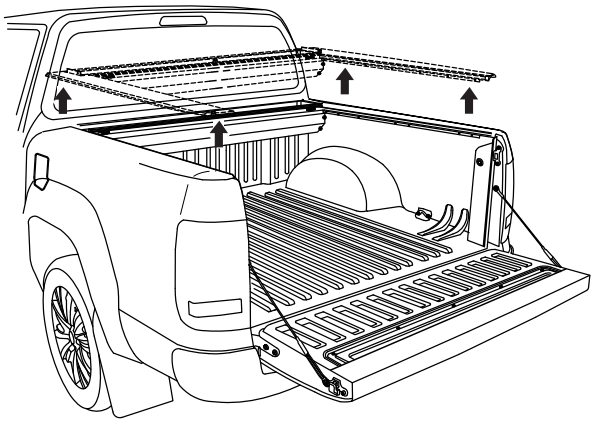

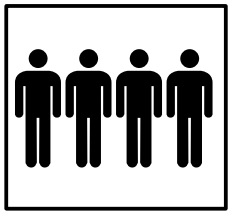

4 People
Recommended for lift

1. Remove and discard the rear clamp brackets on the left and right side rails as indicated.
2. If your side rail is fitted with a foam pad at the rear of the side rails, remove and discard.

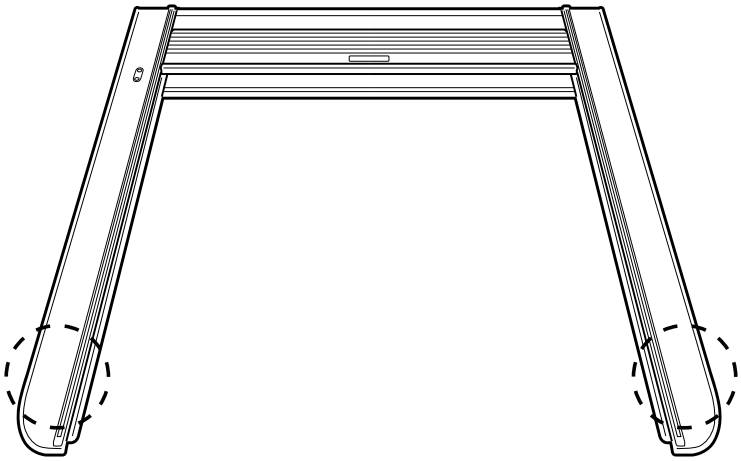

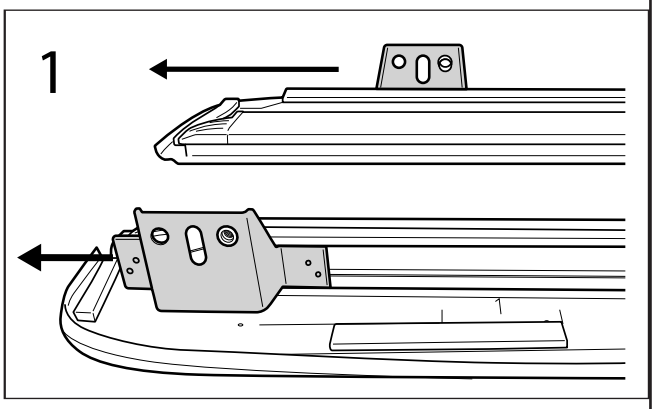

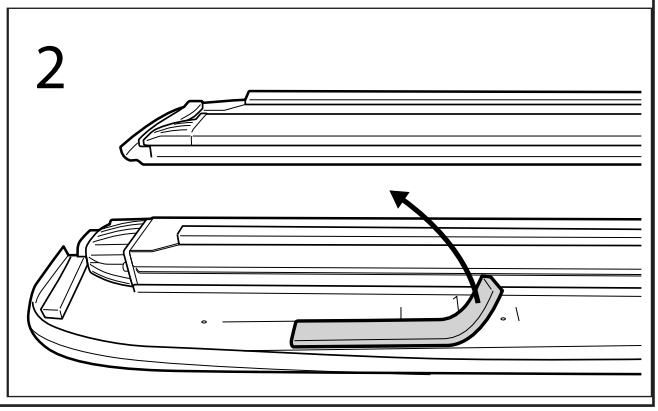

VISUAL TIP

To identify the drilling points on your roll cover side rails, locate two points on the underside that are connected by a straight line. Drill these points using a 12mm drill bit.
If your side rails do not have these markings, please consult the vehicle-specific template provided in the kit for guidance on the drilling points.

Exercise caution while drilling to ensure that the swarf remains clear of the curtain.

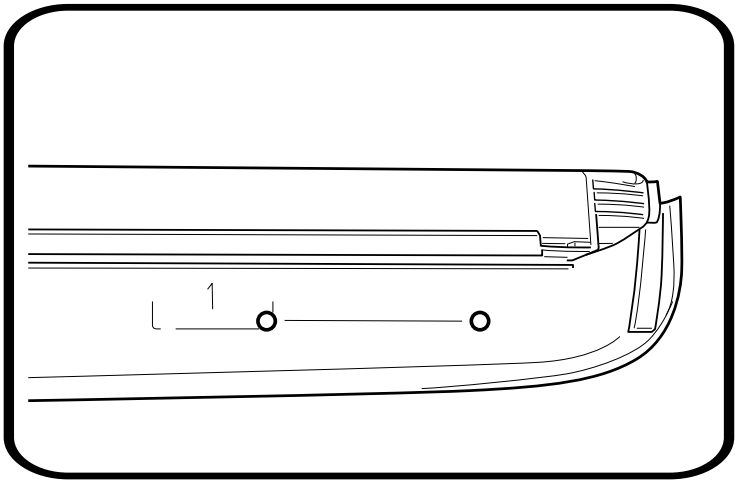

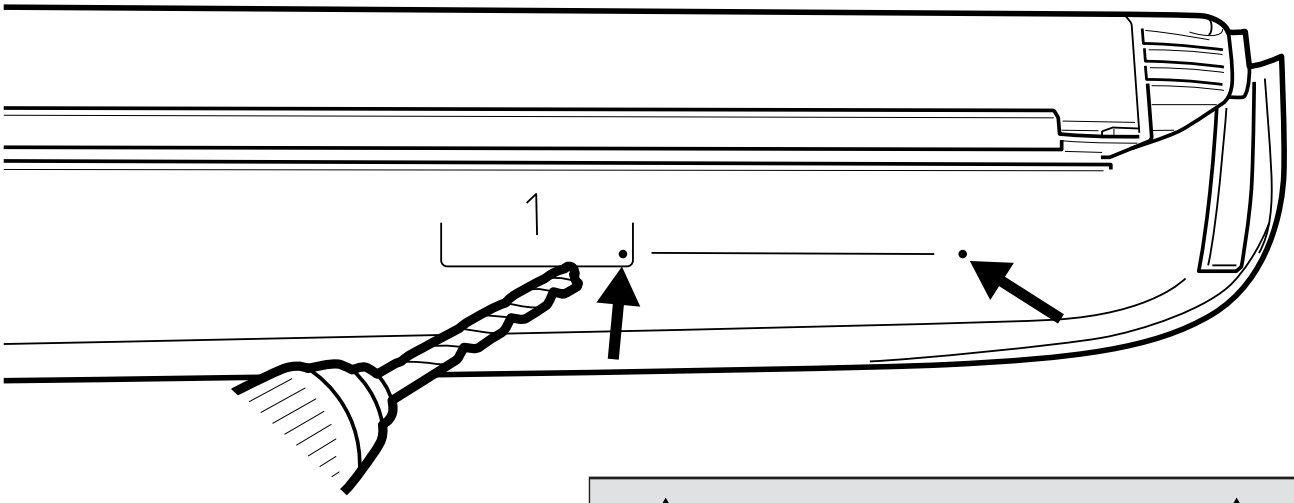

NOTE: THIS STEP ONLY APPLIES TO ROLL R COVER UNITS WITH SERIAL NUMBERS ABOVE 32984

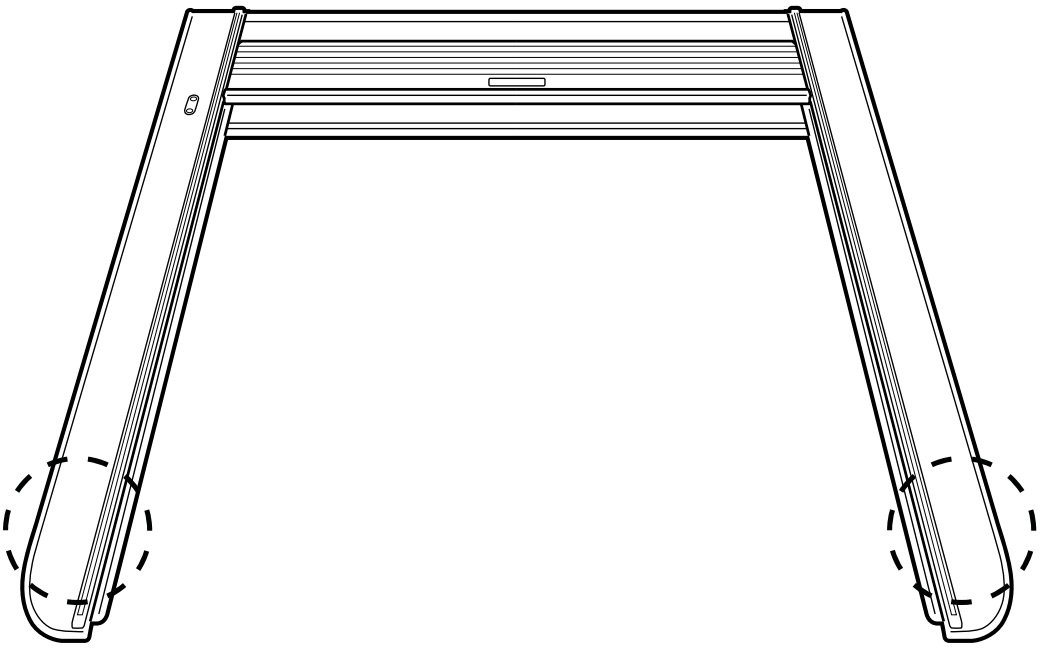

Use the provided templates for vehicles fitted with a Roll R Cover.
Locate and utilize the vehicle-specific template from the kit to guide the drilling points.

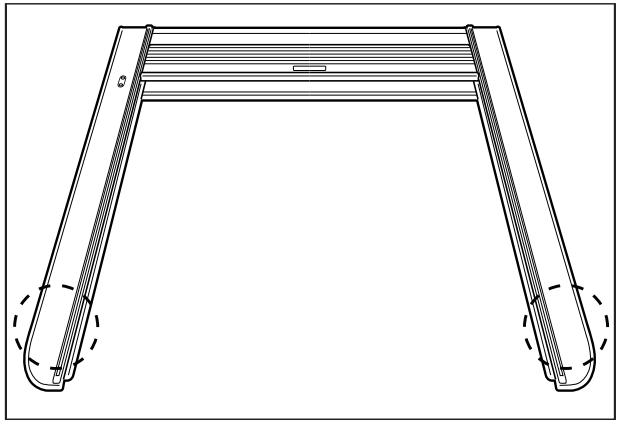

Exercise caution while drilling to ensure that the swarf remains clear of the curtain.

XXXXmm

XXXXmm

TEMPLATE

TEMPLATE

Starting from the outer front corner of the track, measure a downward distance of XXXXmm and mark the corresponding location on the side rail. Position the front corners of the cut-out templates in line with the marked spot, ensuring that the vertical edge of the template is snug against the track.

TAILGATE END

Drill the locations marked on the side rails using a 12mm drill bit.

Exercise caution while drilling to ensure that the swarf remains clear of the curtain.

Tub preparation

Refer to the vehicle-specific table provided and follow the measurements listed there. Start by measuring from the inside of the front rail of the tub along the top edge of the tray for xxxx mm (windscreen end), then mark the position as indicated. Repeat to the other side.

GWM Cannon Ute	1268mm
LDV T60	1231mm
Isuzu Dmax 2021+	1267mm
Mazda BT50 2021+	1267mm
Nissan Navara 2020+	1182mm
Toyota Hilux A Deck 2016+	1224mm
Toyota Hilux J Deck 2016+	1224mm

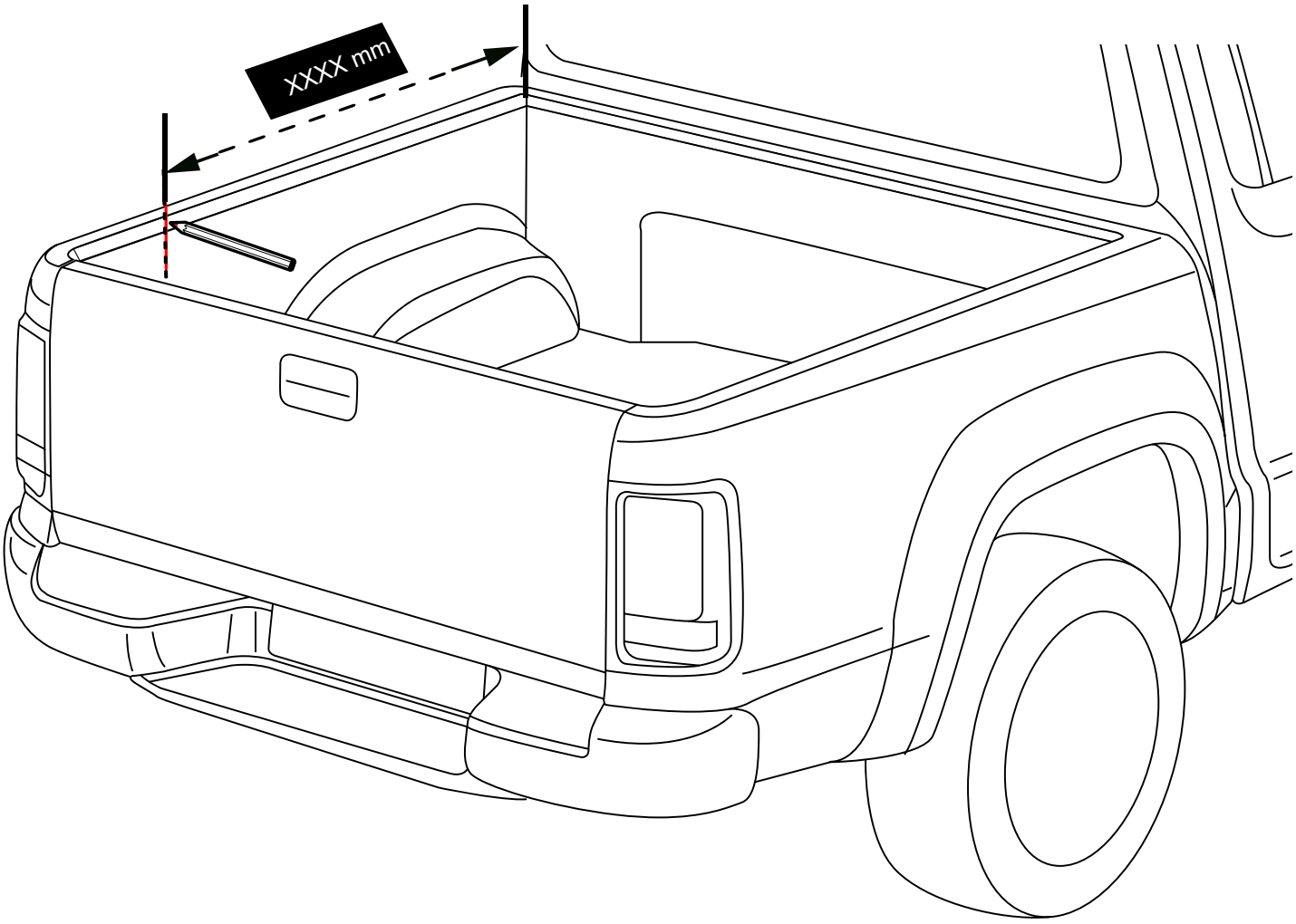

If your ute bed is equipped with factory bolts to the locations indicated, please skip to page 13 of 24.

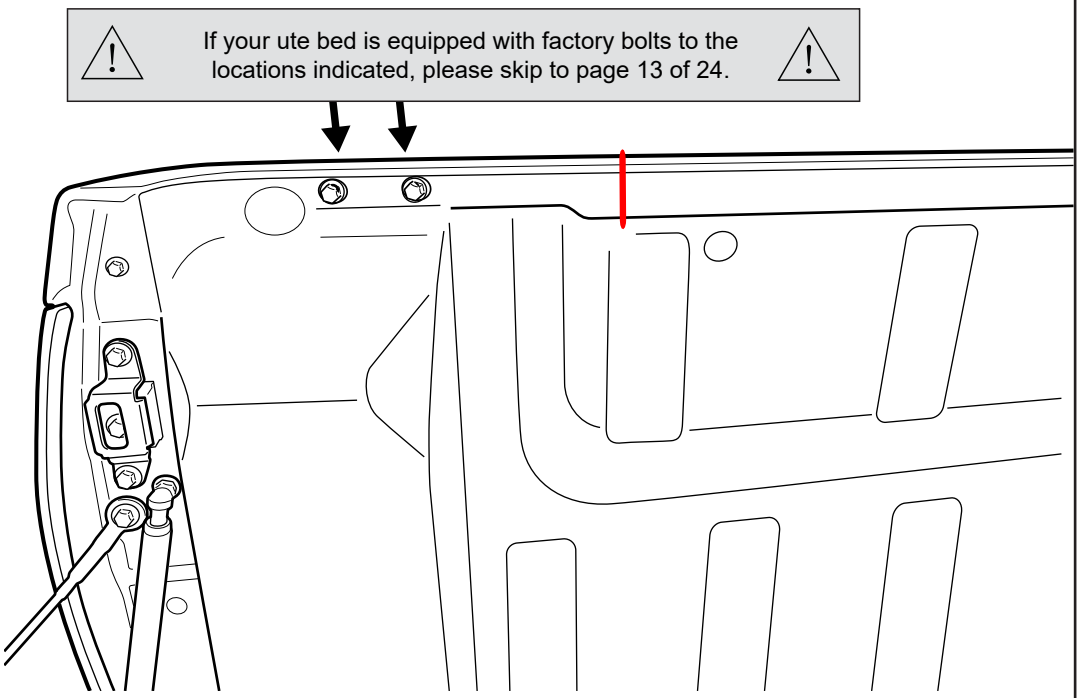

1. Place the LR Spacer on the top rail of the ute tub.
2. Position Bracket (LR-ASS-007 Sleeve RMB) over LR spacer and align the front of the bracket with the previously marked line.

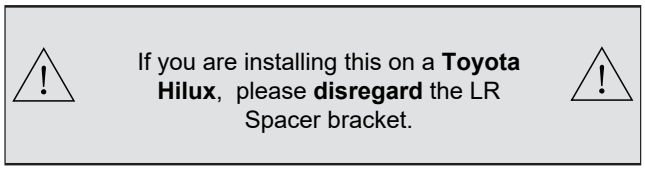

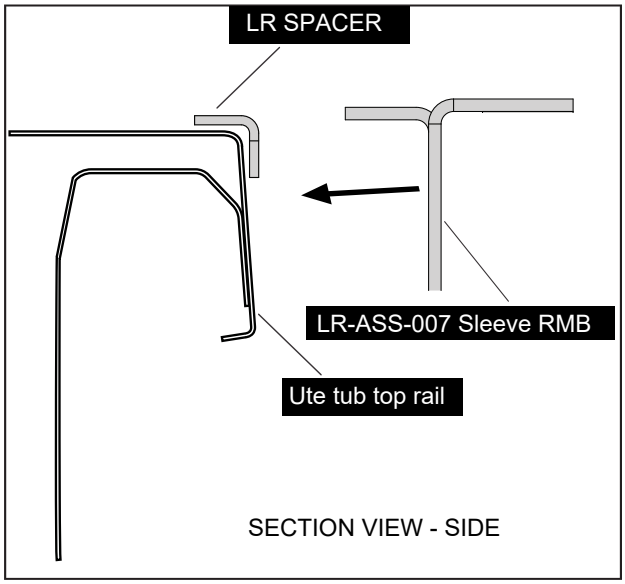

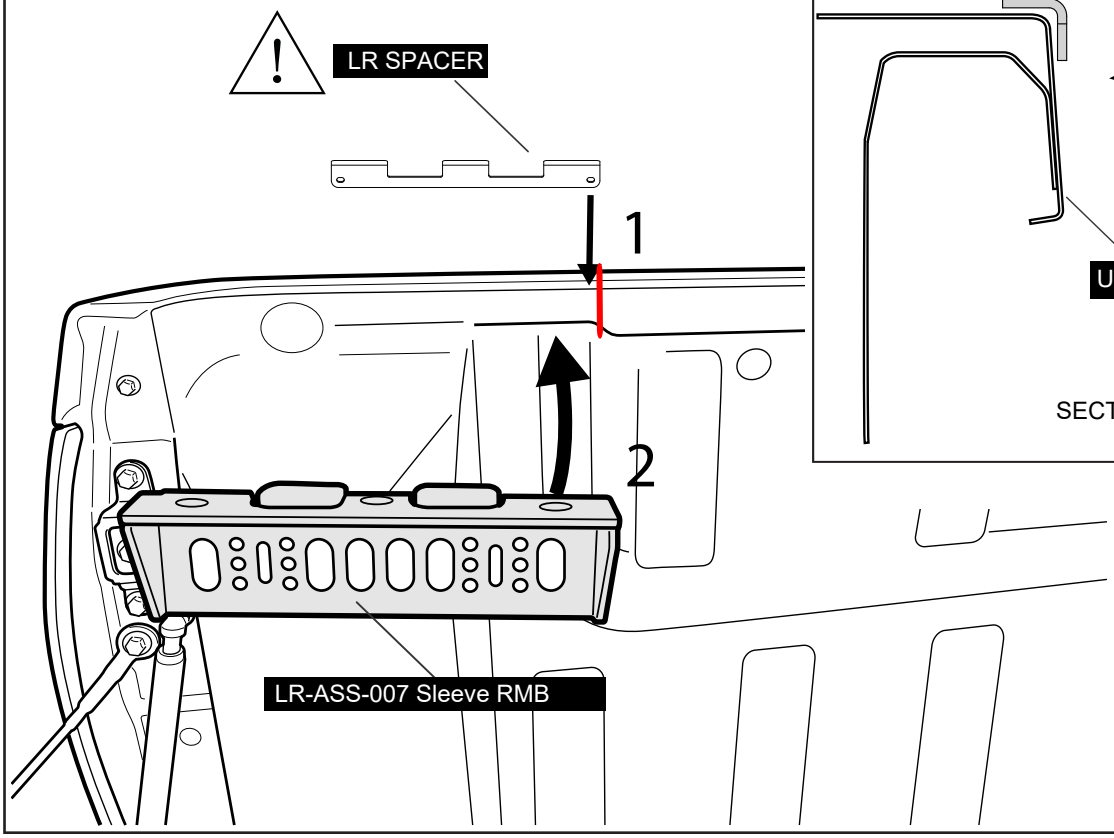

Making sure that the bracket (LR-ASS-007 Sleeve RMB) is in-line with the previously marked line.
Apply firm downward pressure on the bracket and secure it by using the provided self-drilling screws to the center of the two indicated elongated holes of the bracket. The top of the bracket is to sit level to with the top of the tub bed rail. You may loosen the screws to adjust if required.

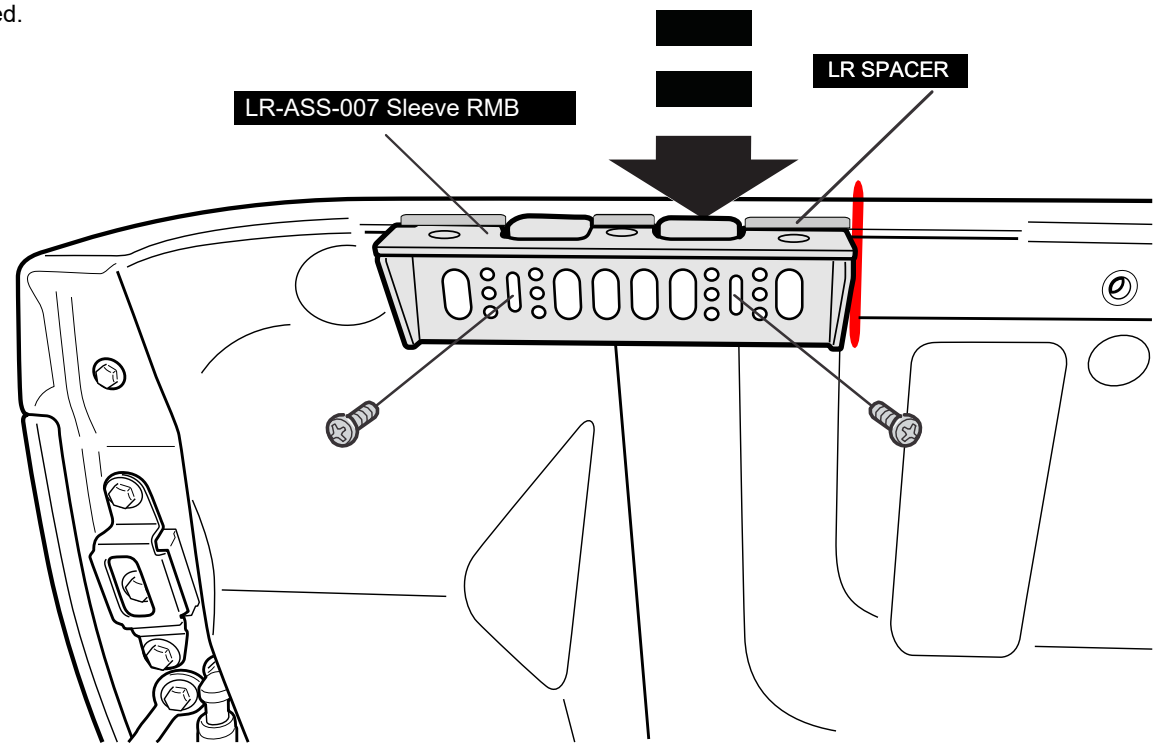

Now secure the bracket tight using the self drilling screws to the indicated locations.

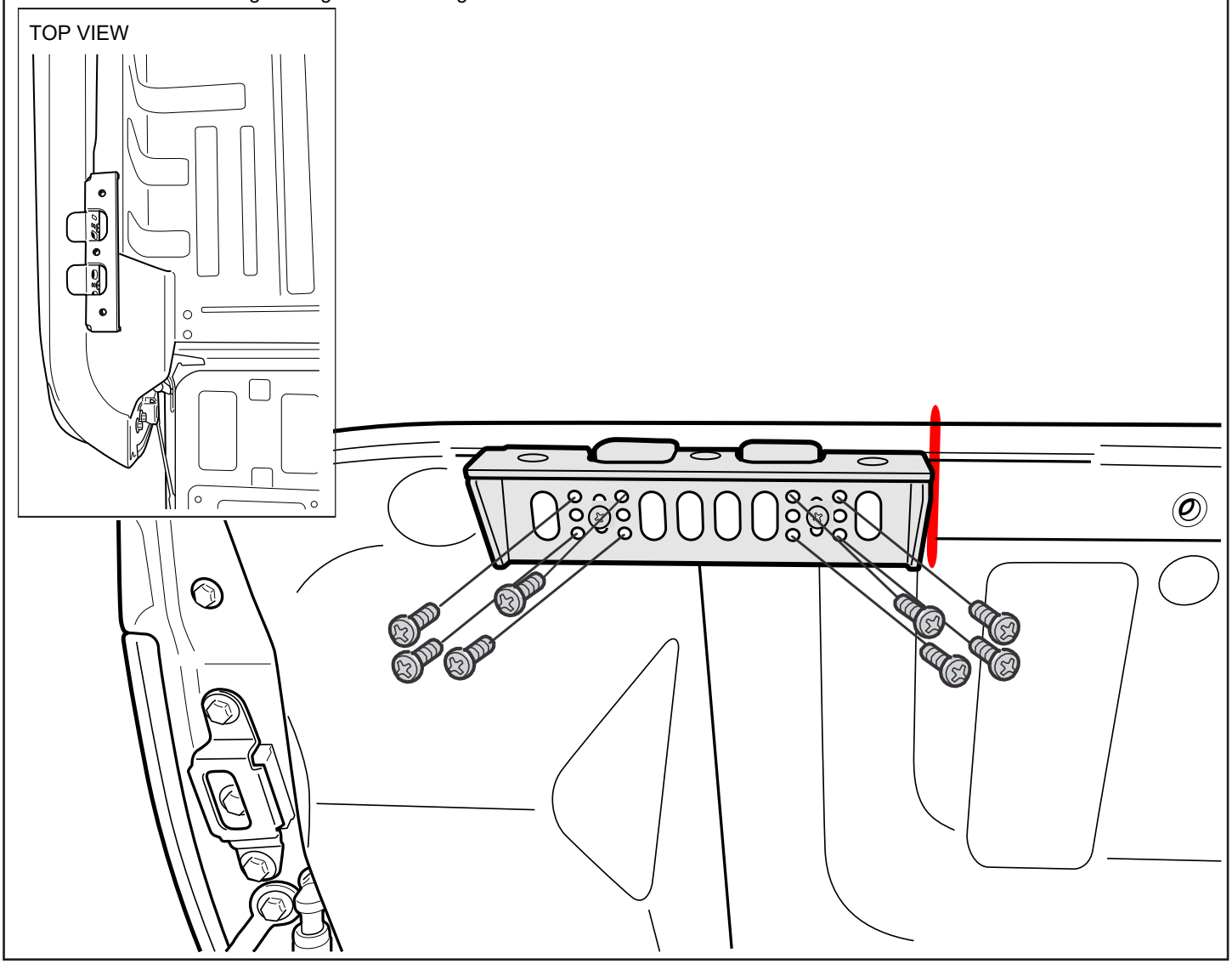

Tub preparation

Remove indicated factory bolts and discard.

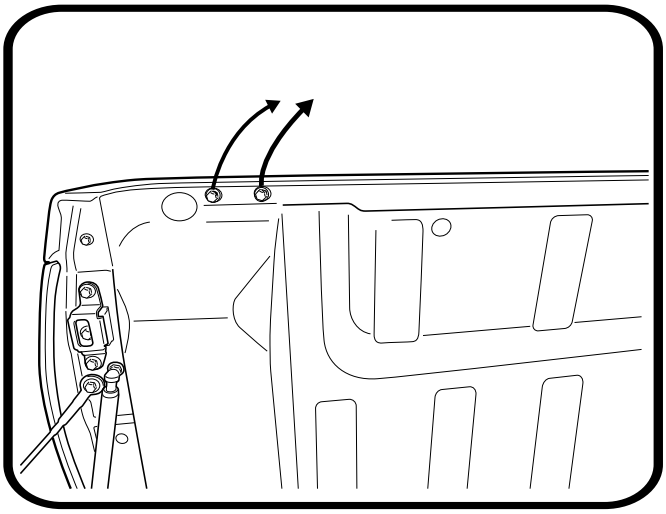

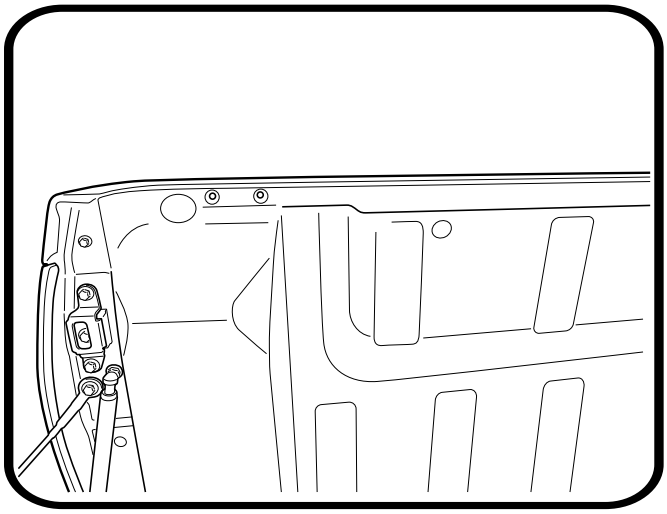

1. Place the LR Spacer on the top rail of the ute tub.
2. Position Bracket (LR-ASS-007 Sleeve RMB) over LR spacer and align the front of the bracket with the previously marked line.

If you are installing this on a **Toyota Hilux**, please **disregard** the LR Spacer bracket.

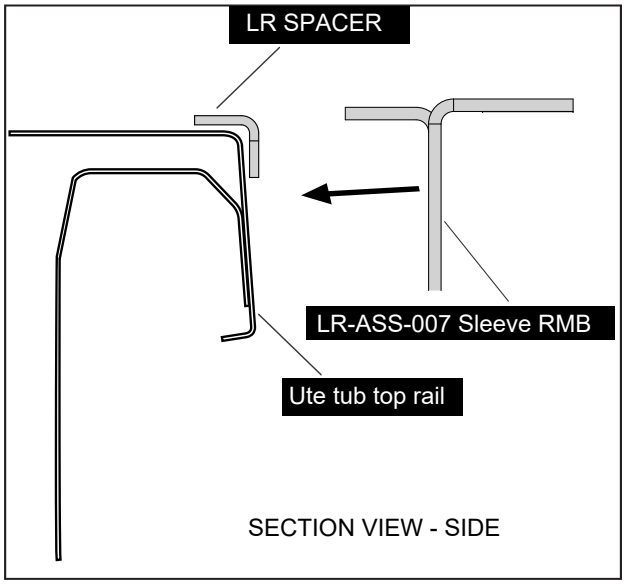

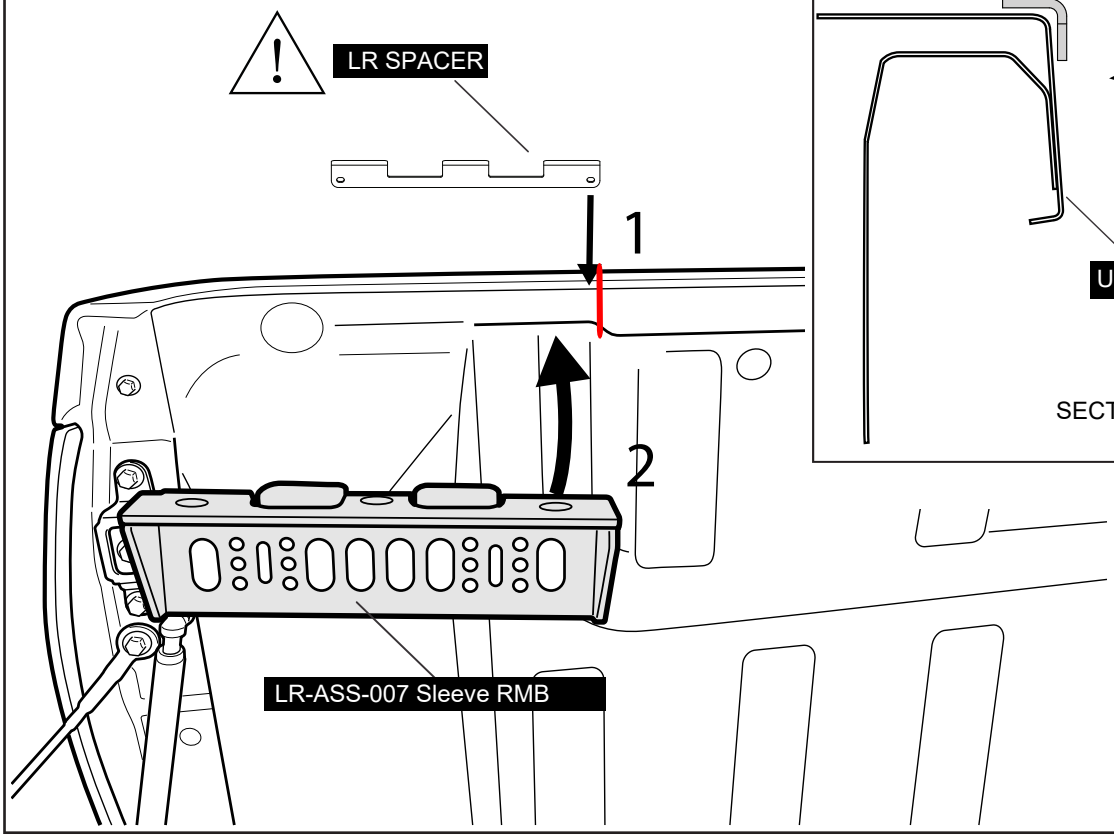

1. Align the elongated holes at the rear of bracket (LR-ASS-007 Sleeve RMB) with the thread of the tub. Apply firm downward pressure to secure the bracket, then fasten it in place using the provided M8x25mm Allen head bolt which has the spring washer and mudguard washer loaded to it.
2. Fasten front of bracket using self-drilling screws, aligning them with the center of the indicated elongated hole.

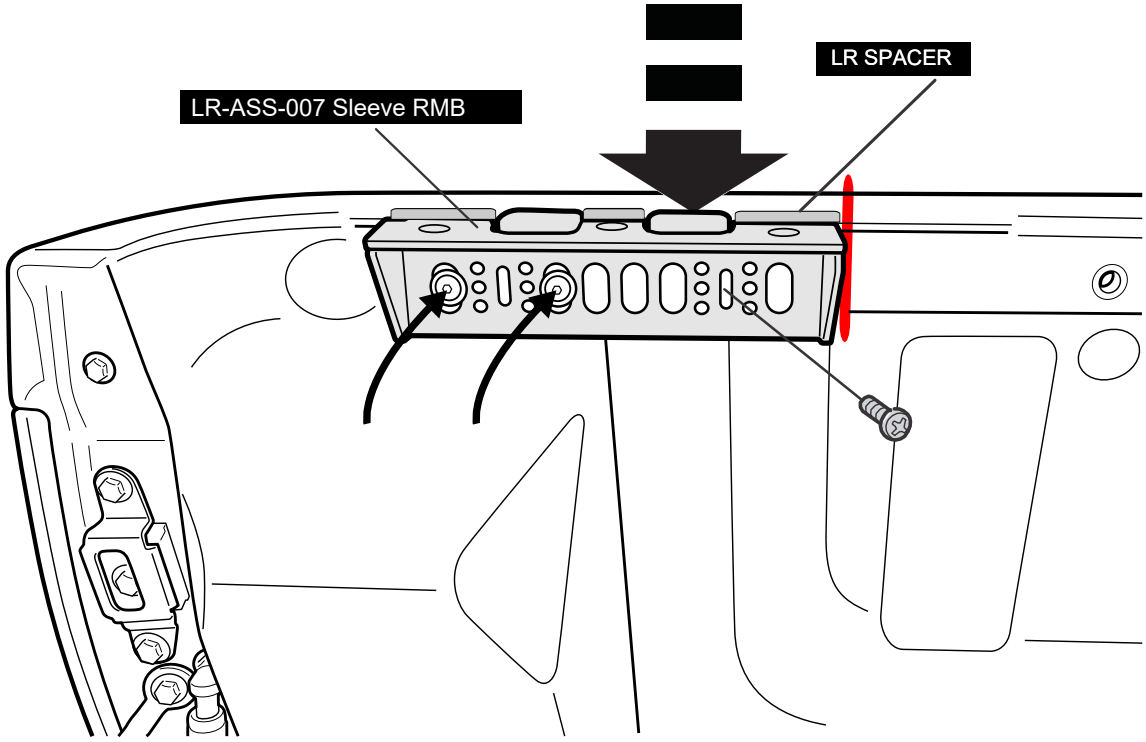

Now secure the bracket tight using the self drilling screws to the indicated locations.

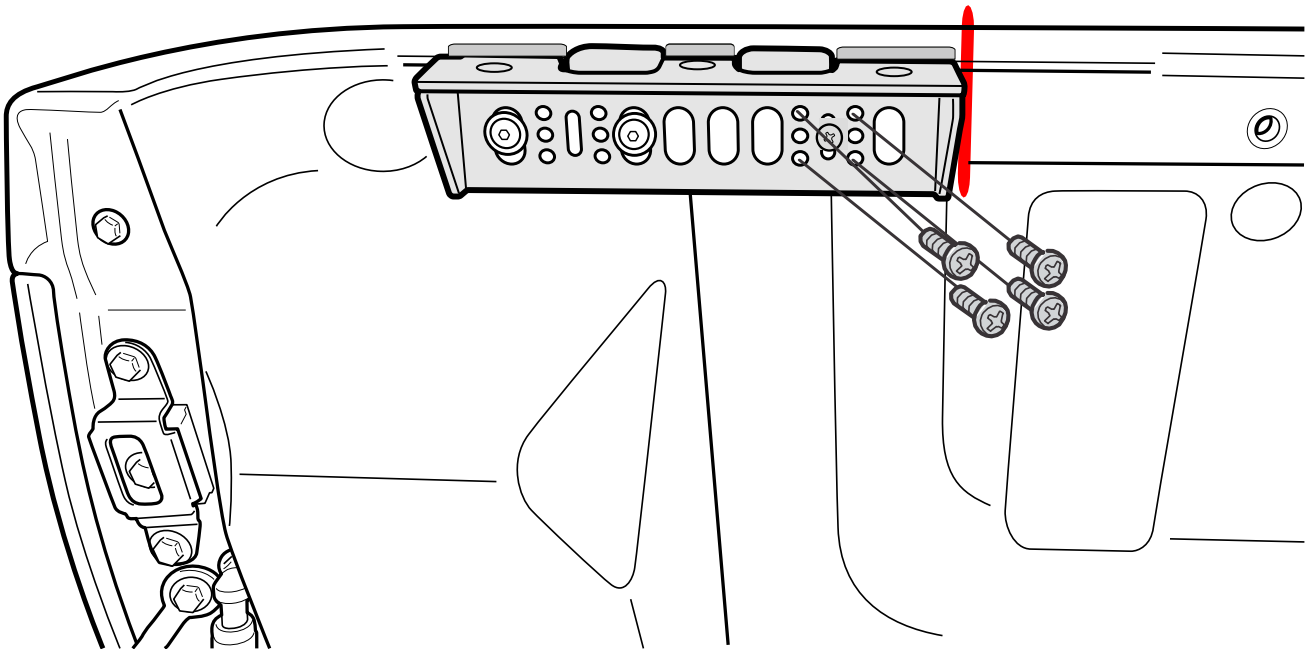

Apply the foam pad (LR-FG-004 Foam Sleeve Pad) to the top of the bracket as indicated, aligning the holes on the foam pad with the center of the threads on the bracket.

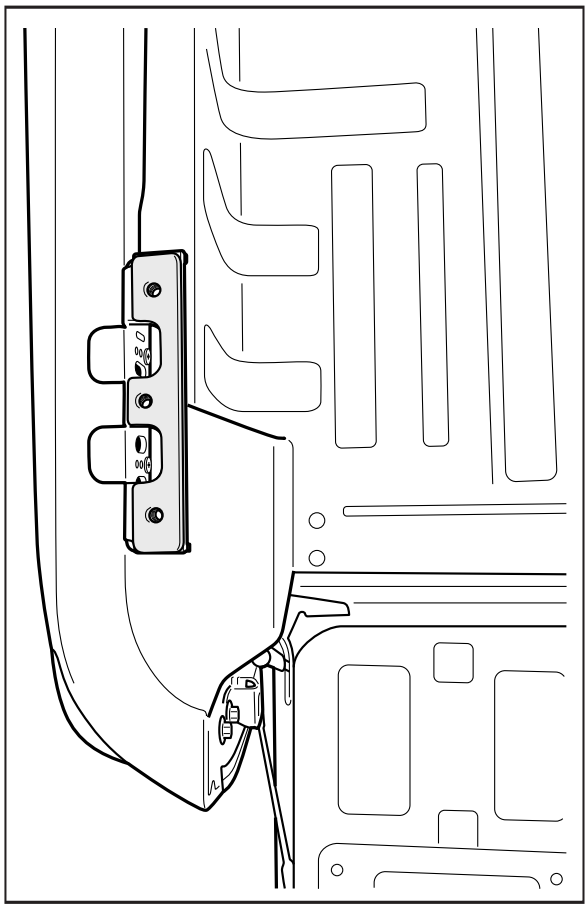

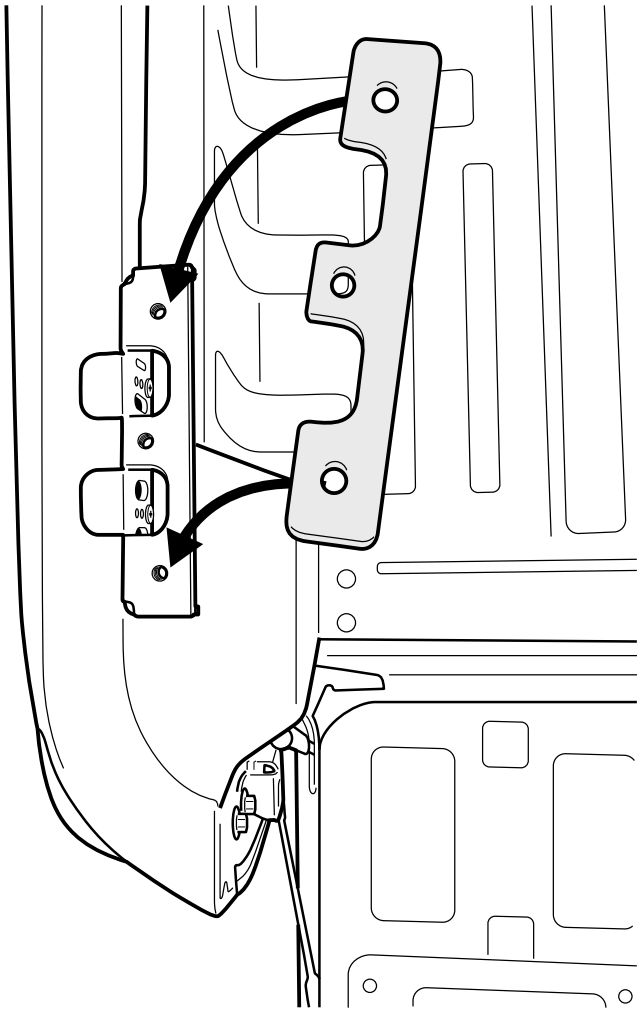

With caution and assistance, carefully place the Roll R Cover back onto the top rail of the ute tub, ensuring not to cause any damage. Stop just before reaching the load rack base brackets.

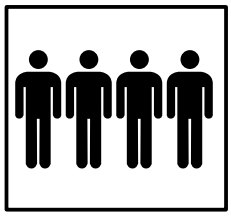

4 People
Recommended for lift

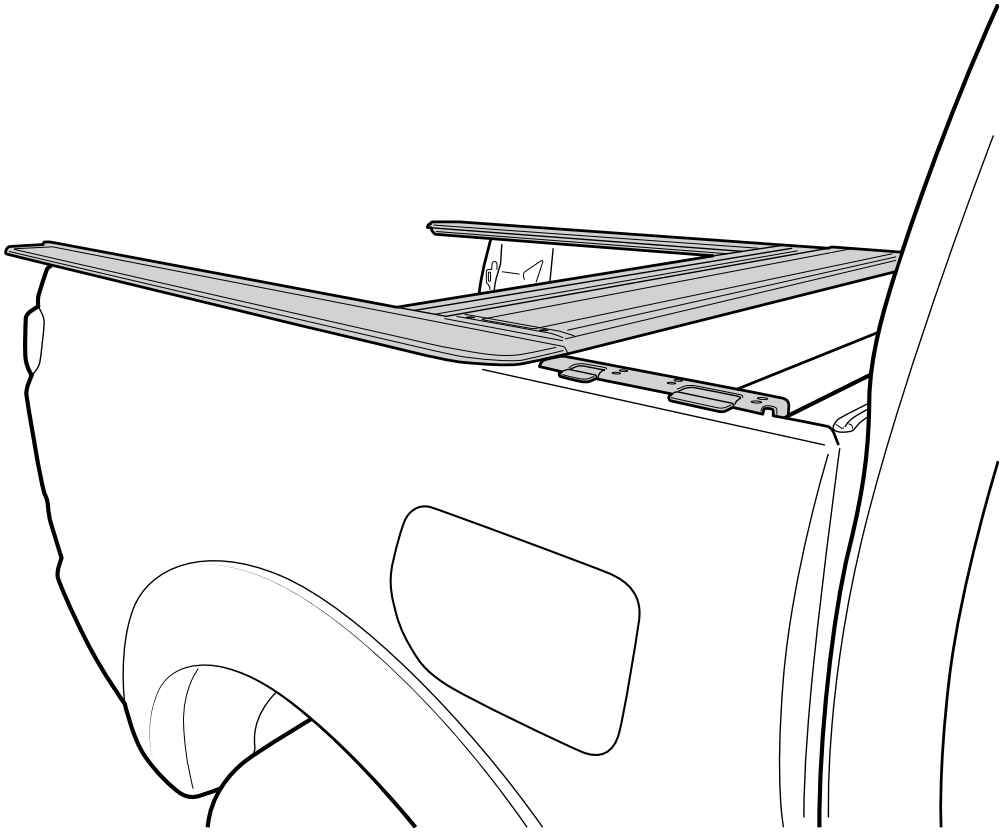

VISUAL TIP

Exercise caution and seek assistance as needed. Gently raise the side rails and shift the roll r cover forward, allowing the motor and driver side rail to fit between the load rack's base brackets. Depending on the situation, it may be necessary for two individuals to lift the rear of the side rails to prevent any collisions between the side rail clamp brackets and the ute tub.

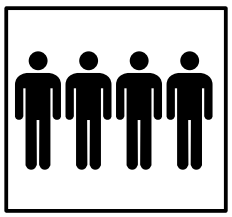

4 People
Recommended for lift

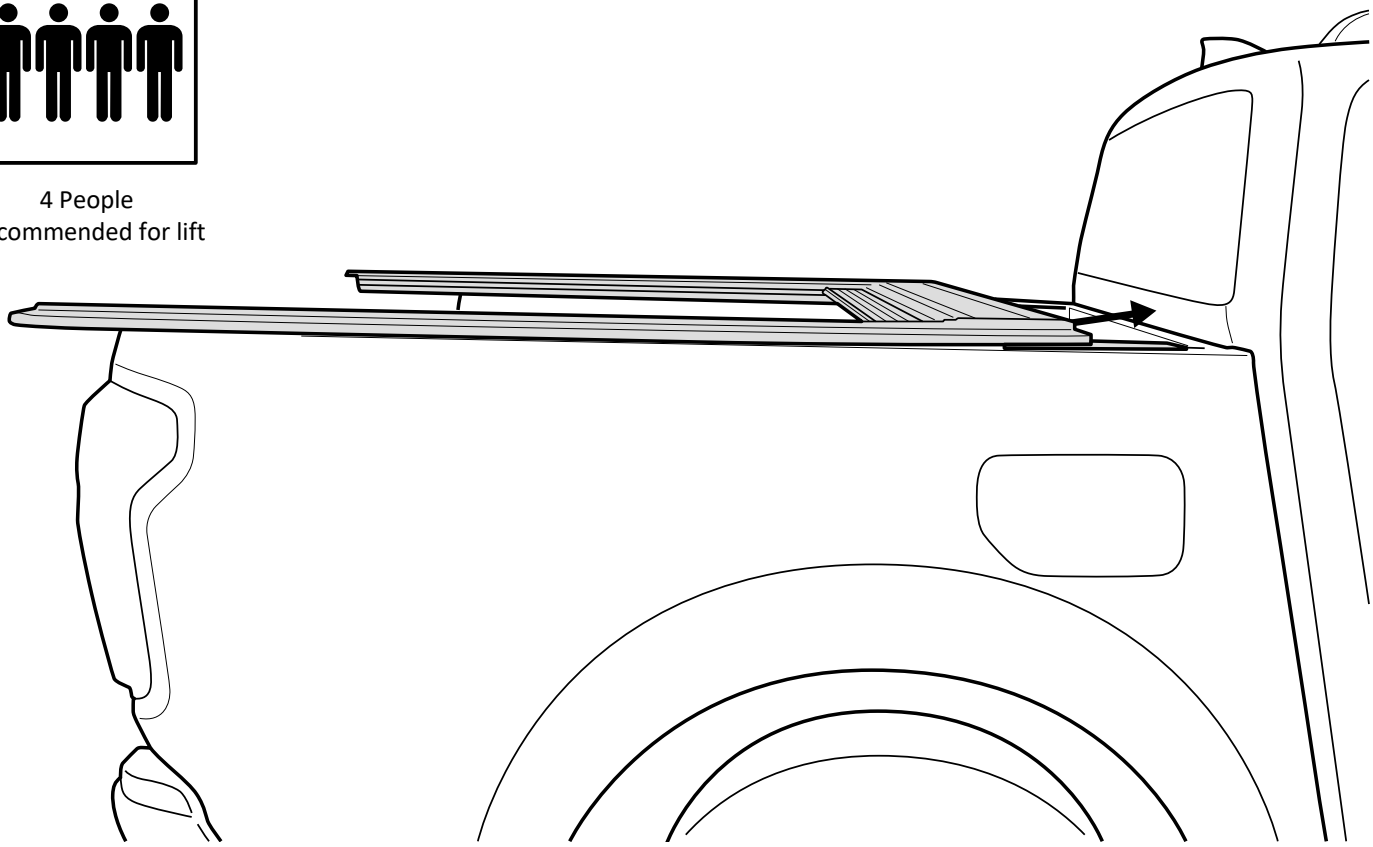

Completed View.

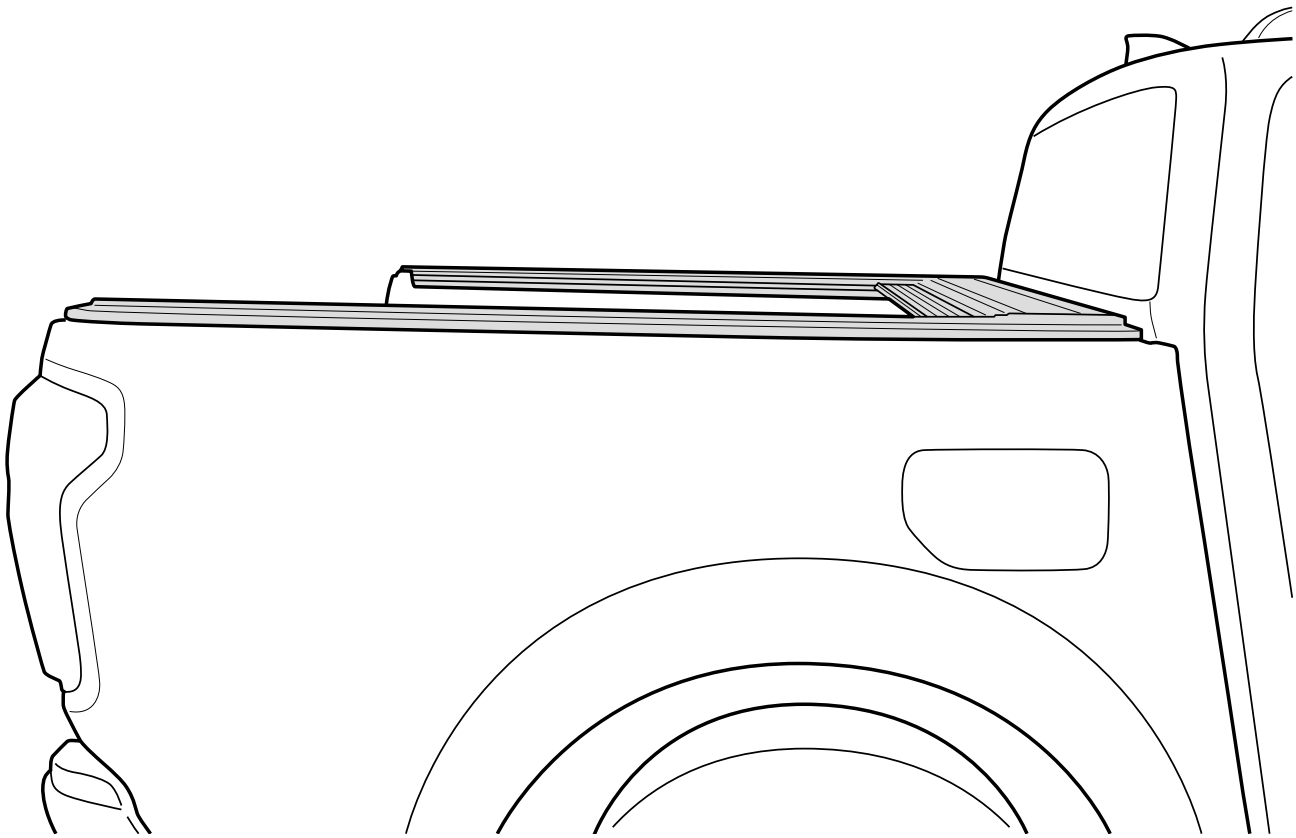

With care, pull out any side rubber that has folded under the side rail.

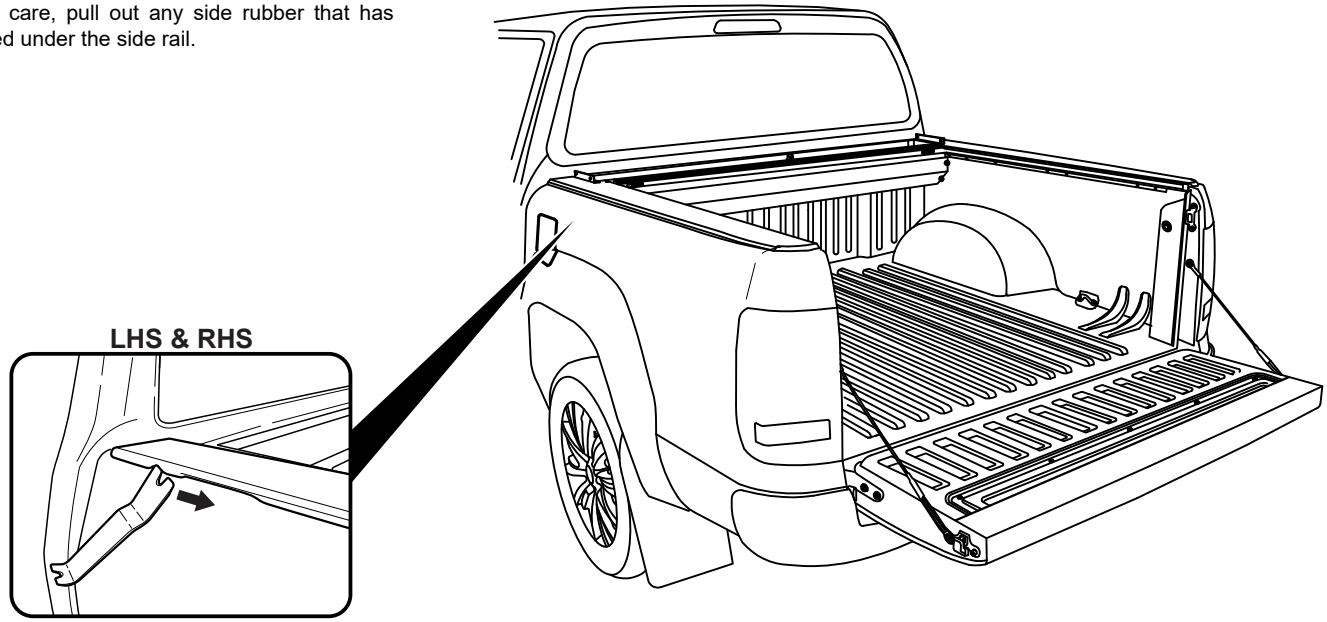

With the tailgate up (Closed position), Pull left & right hand side rails towards the tailgate, stopping short by 7mm between tailgate and side-rail endcap.

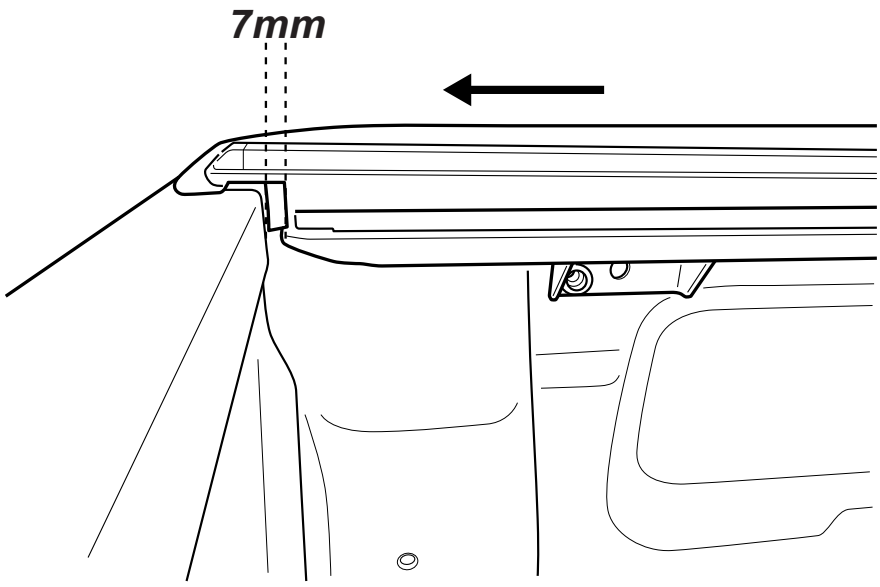

Foam compressed to 7mm when tailgate is closed.

1. Center the holes of the side rails to the thread of the bracket below.
2. Apply a thin layer of sealant to the holes on the side rail.
   Repeat to the other side.

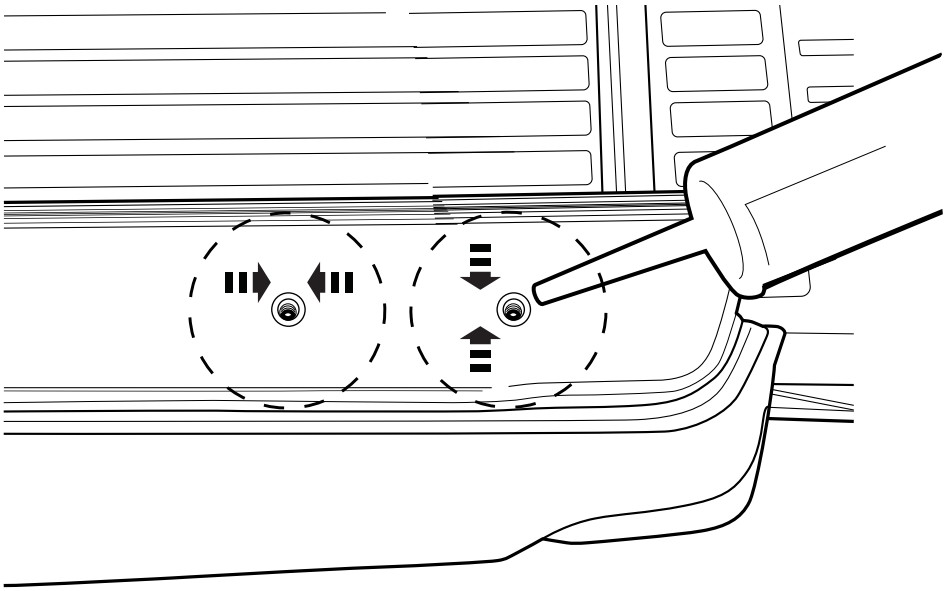

With care, and ensuring to avoid the edges of the side rails' rubber seal, place the Load rack leg (LR-ASS-008 LEG) on top of the side rails. Align the elongated holes with the threads of the base brackets. Secure it loosely in position using the supplied M8x25mm Allen head bolt, which has the spring washer and mudguard washer attached.
Repeat to the other side.

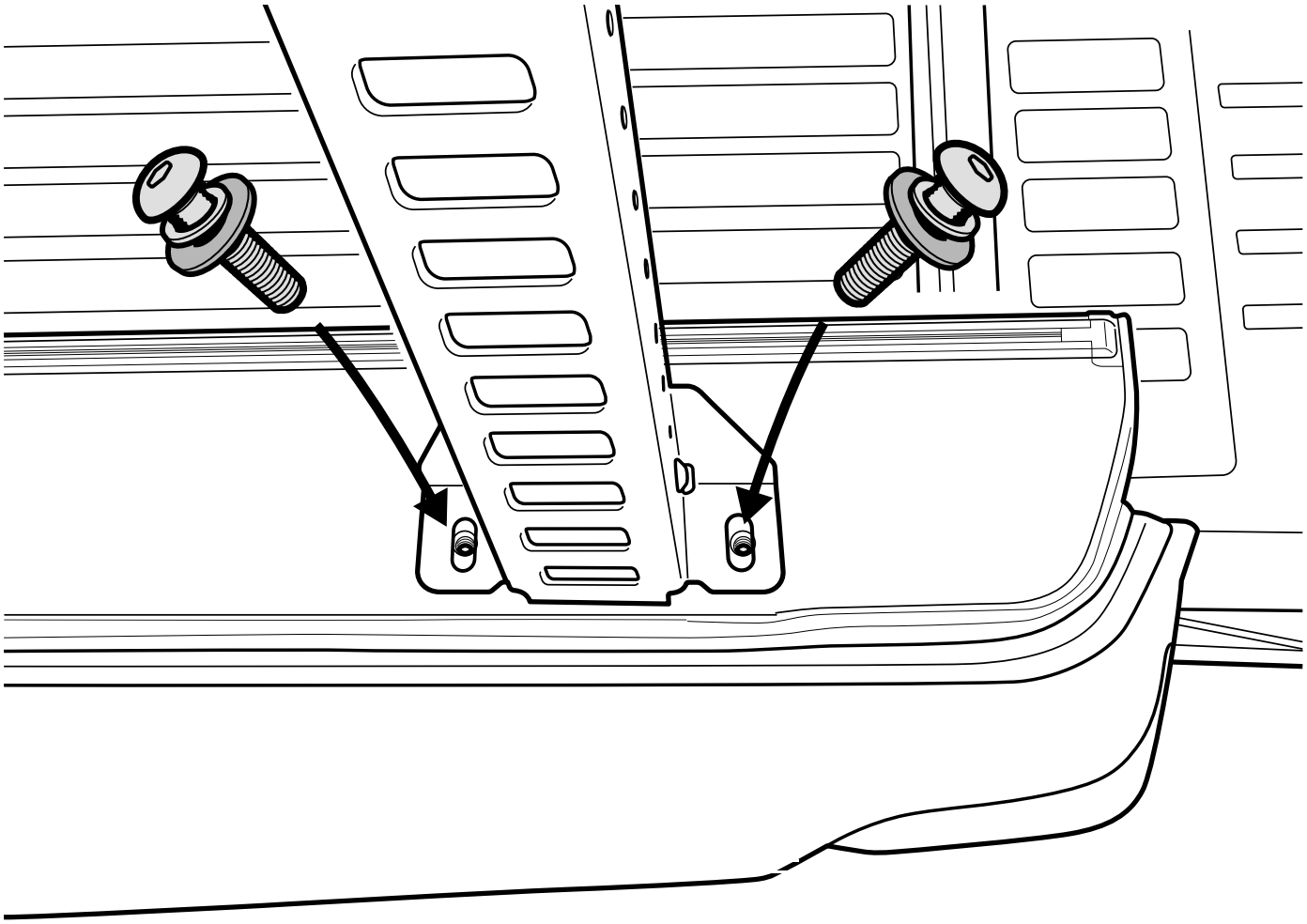

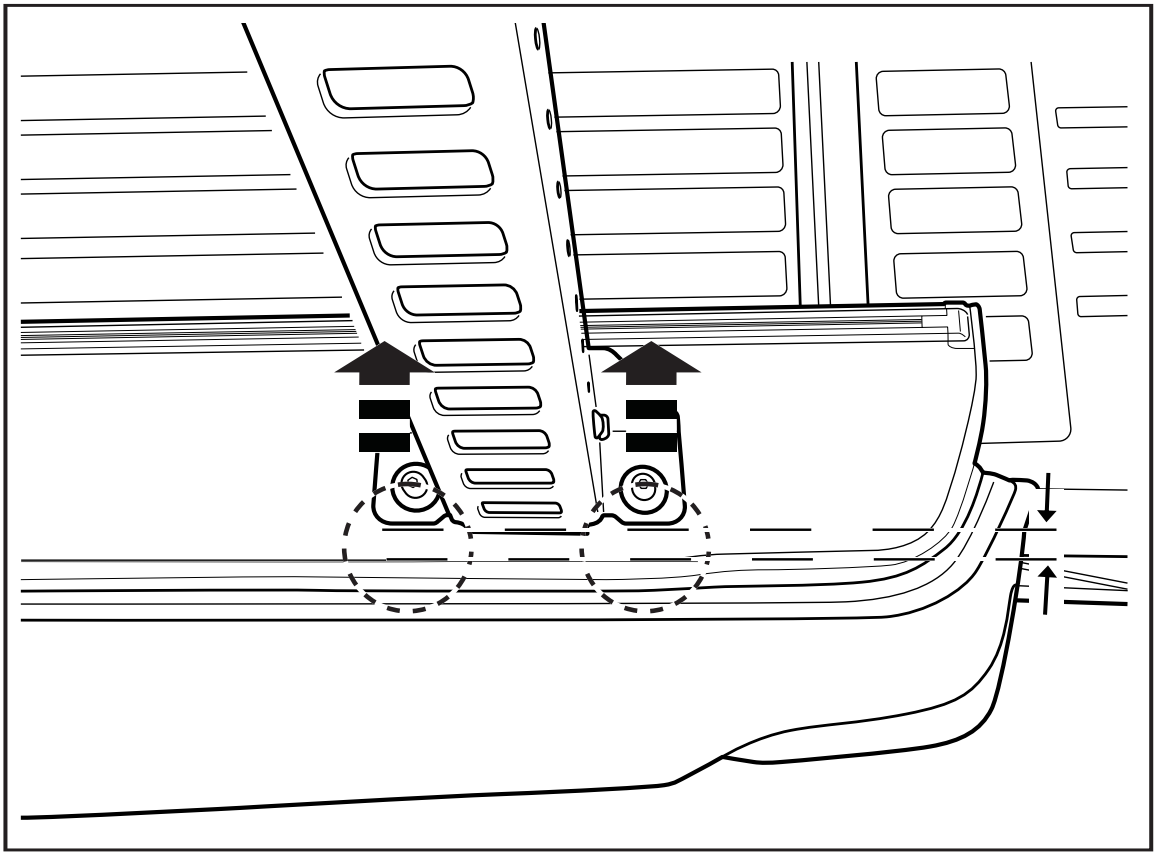

1. As indicated place the assembled cross bar to the upright legs. You will need to align the channel nut to the upright legs pre drilled holes.
2. Secure it loosely in position using the supplied M6x12mm socket head bolt which has the spring washer already loaded.

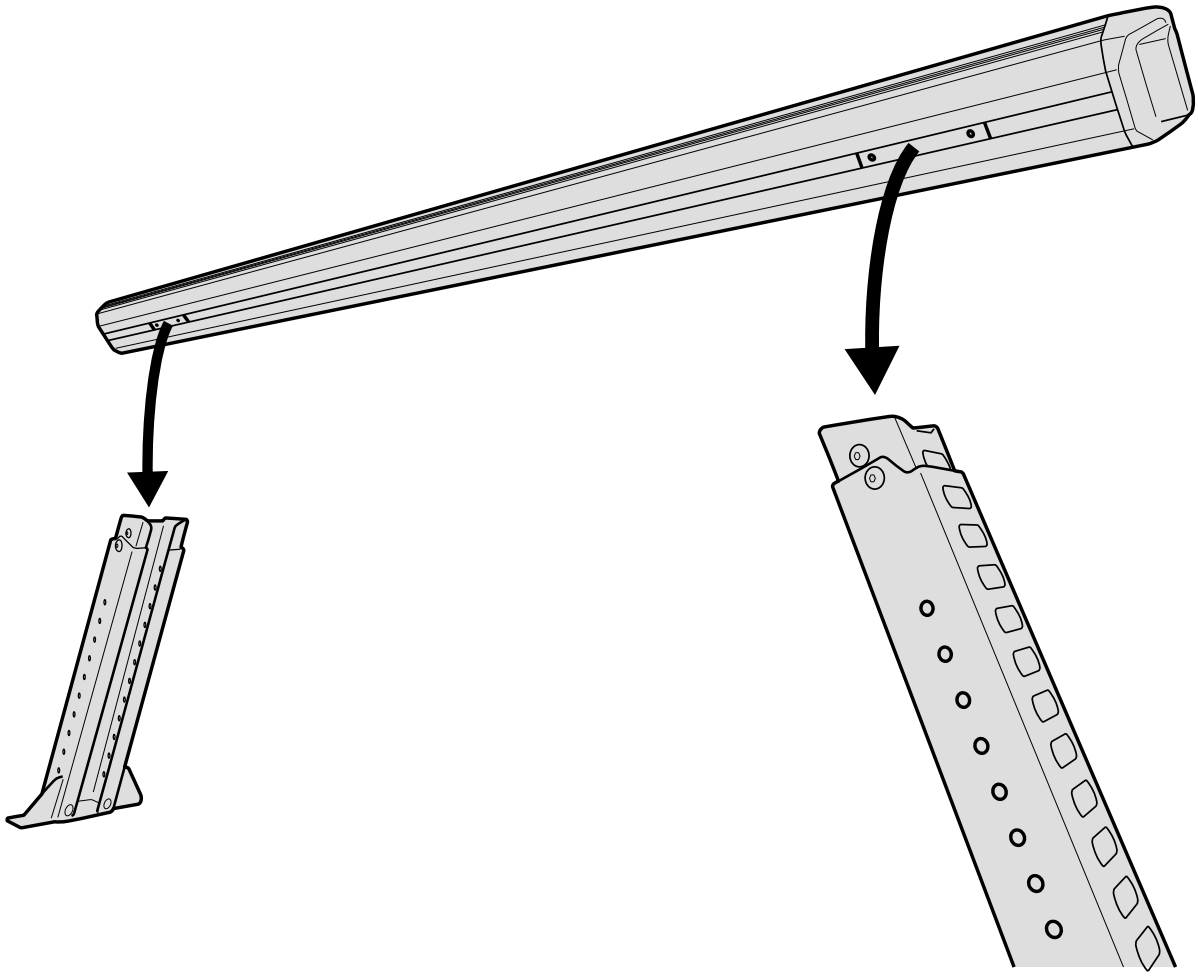

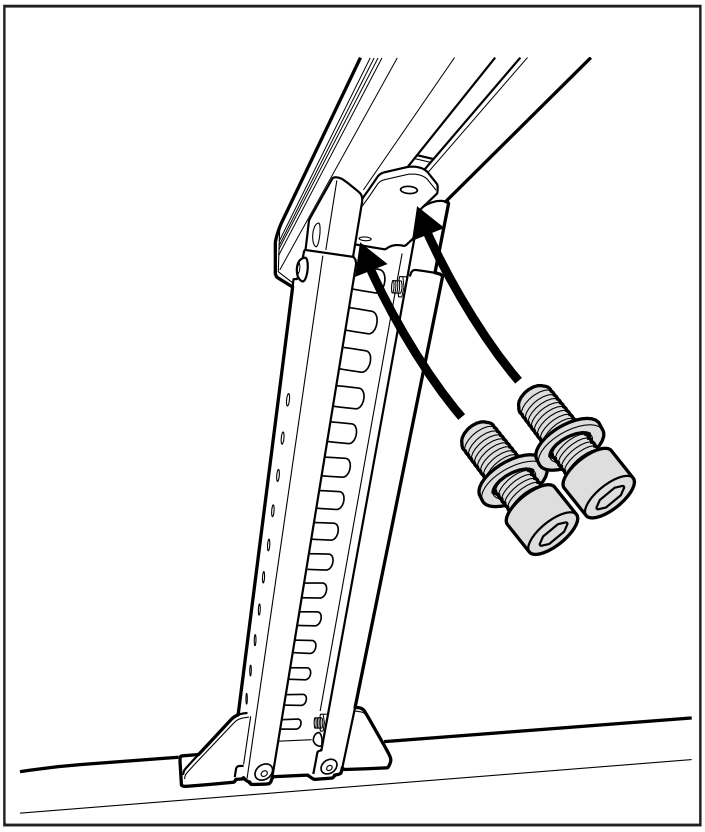

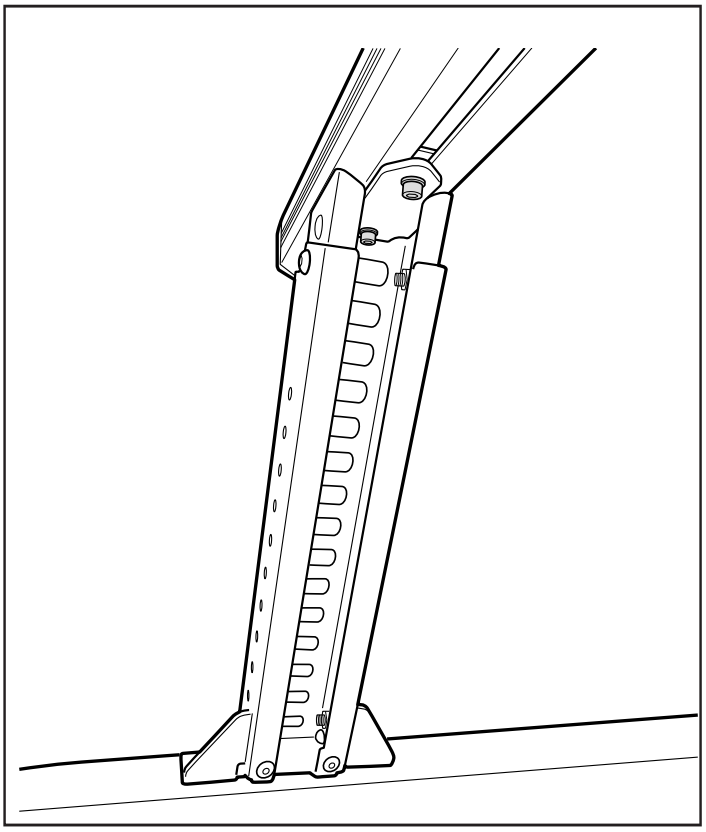

1. Measure and center cross bar.
2. Make sure uprights are parallel and the elongated holes of the uprights are as close to centered to the thread of the base bracket, ensuring to avoid the edges of the side rails' rubber seal.

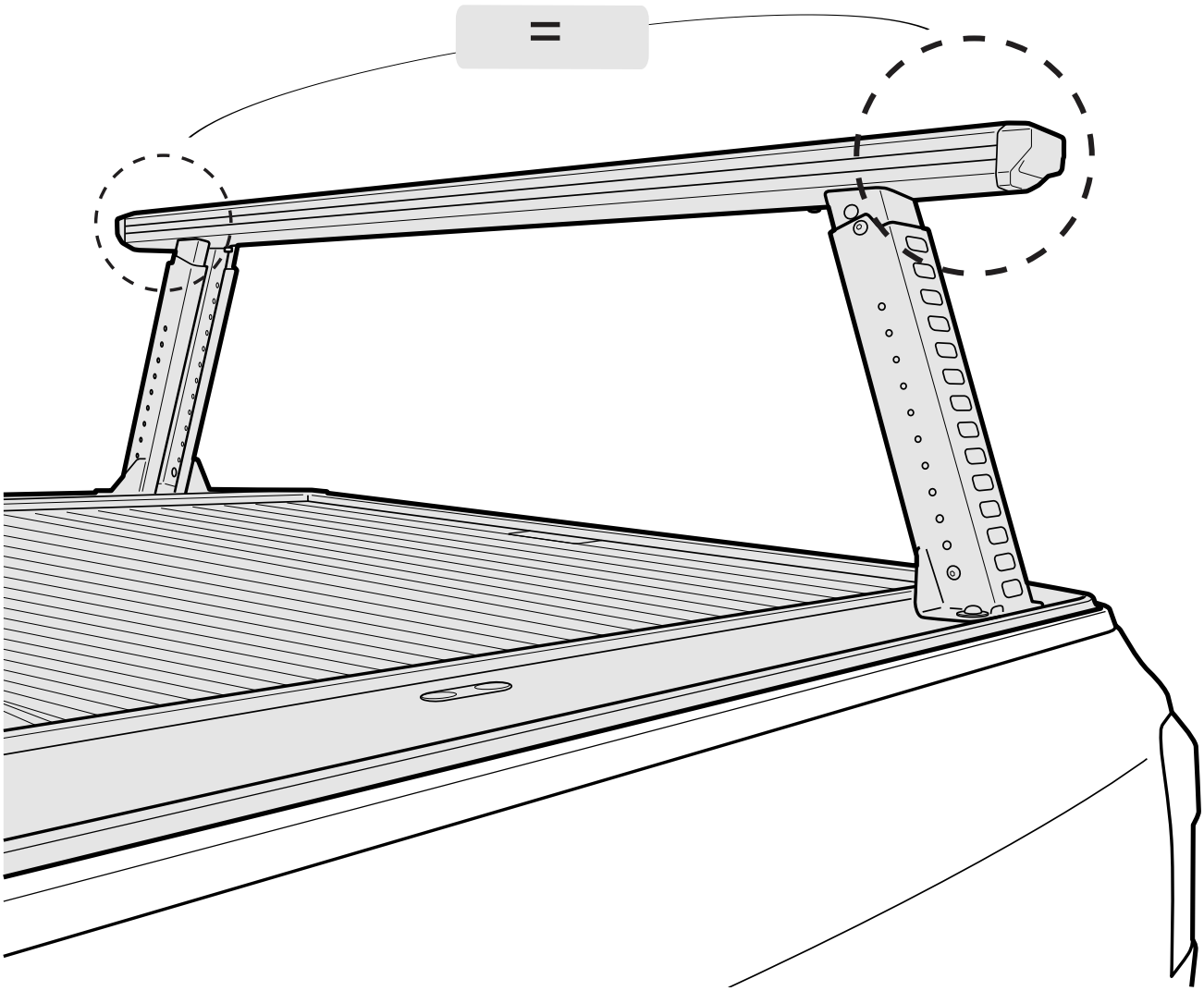

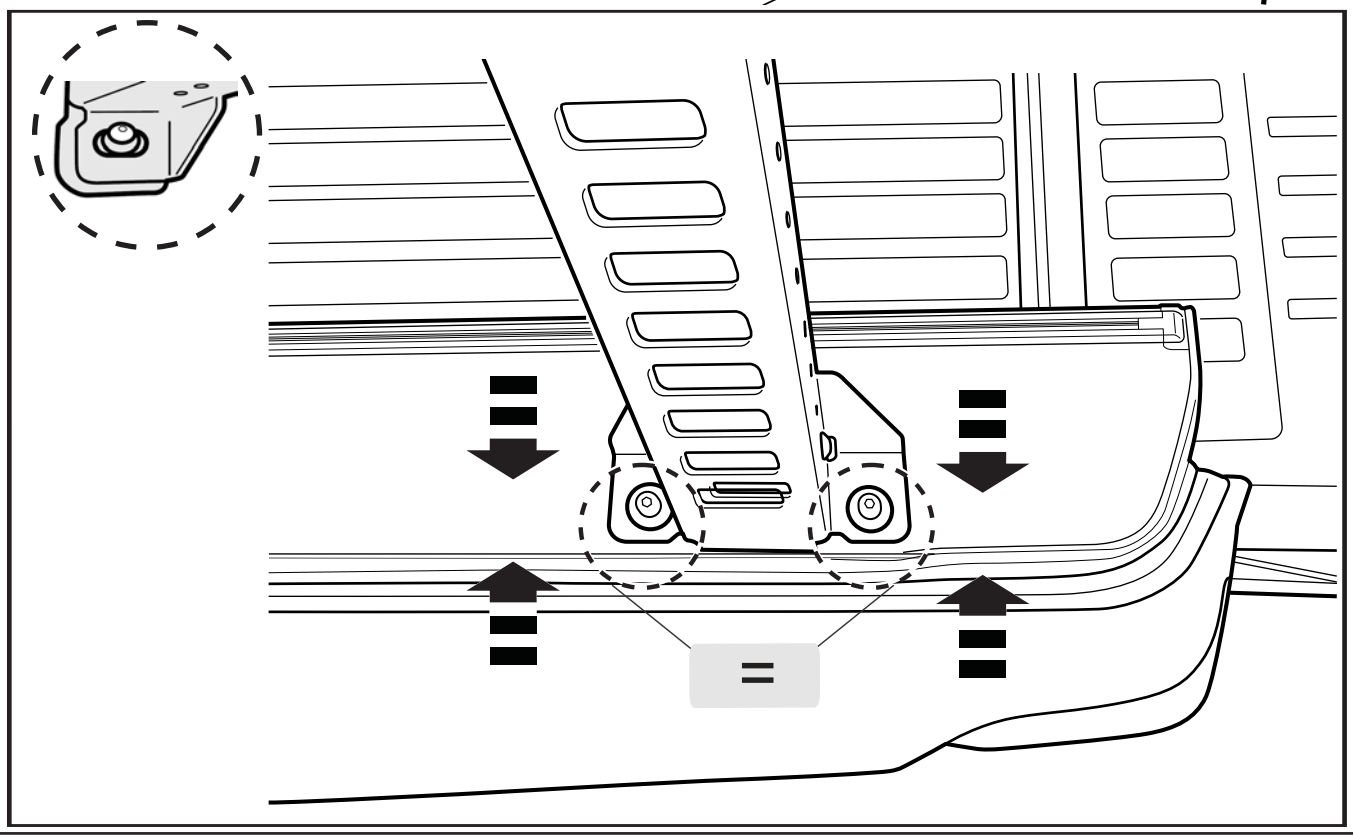

For accurate alignment of the side rails of the roll r cover, refer to the vehicle-specific table and follow the measurements provided. Start by measuring from the outside of the accessory track on one side rail to the outside of the track on the opposite side. Adjust the position of the side rails by either extending or retracting them until the desired measurement is attained, ensuring they remain parallel to the front of the side rails.

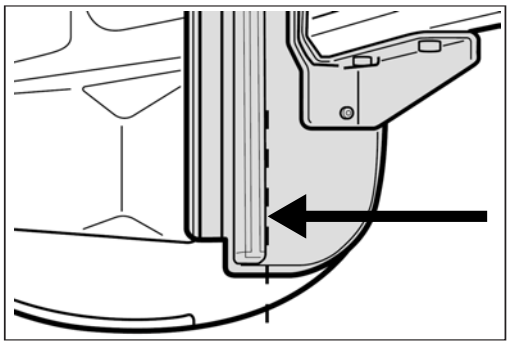

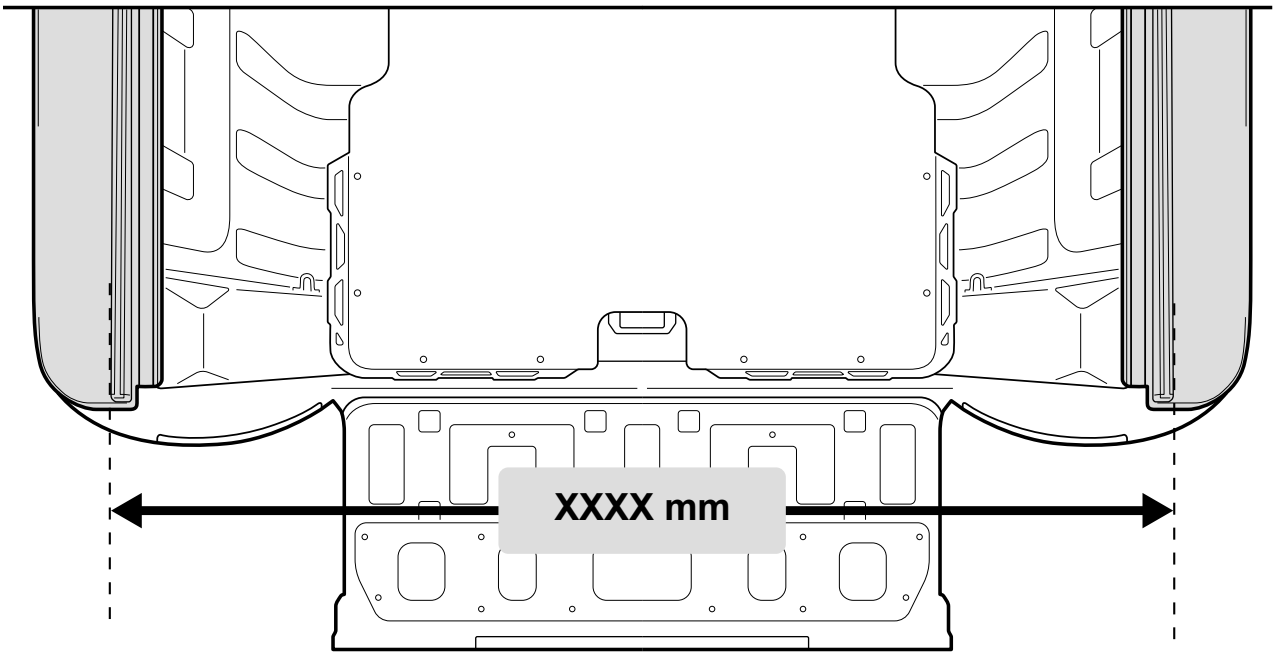

Vehicle	Side Rail to sit PARALLEL +/- 2mm
GWM Cannon ute	1383mm
LDV T60	1373mm
Isuzu Dmax 2021+	1396mm
Mazda BT50 2021+	1396mm
Nissan Navara 2020+	1356mm
Toyota Hilux A Deck 2016+	1383mm
Toyota Hilux J Deck 2016+	1440mm

While maintaining alignment, firmly tighten all specified bolts at location a followed by b.
Securely tighten all bolts to 8nm torque.

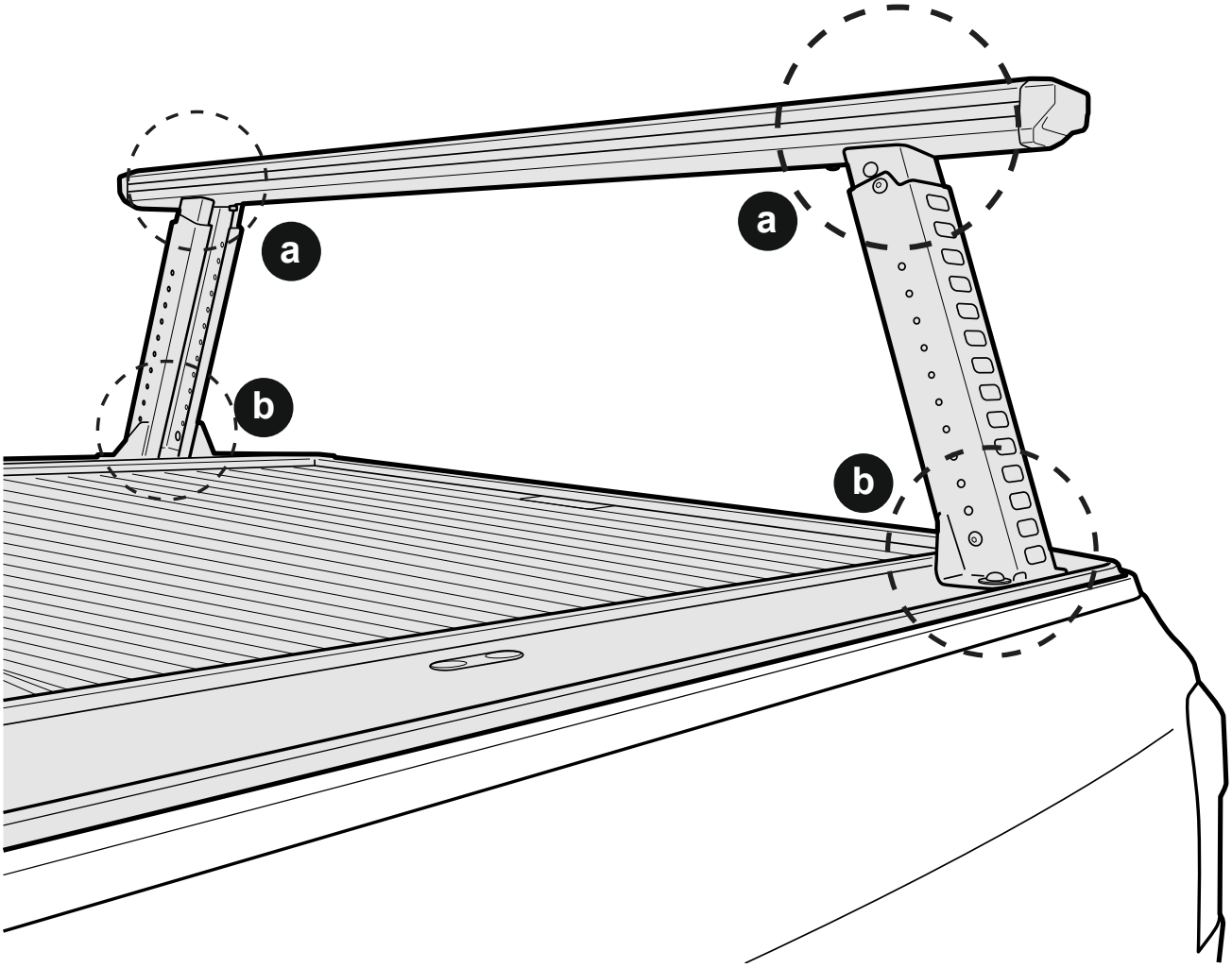

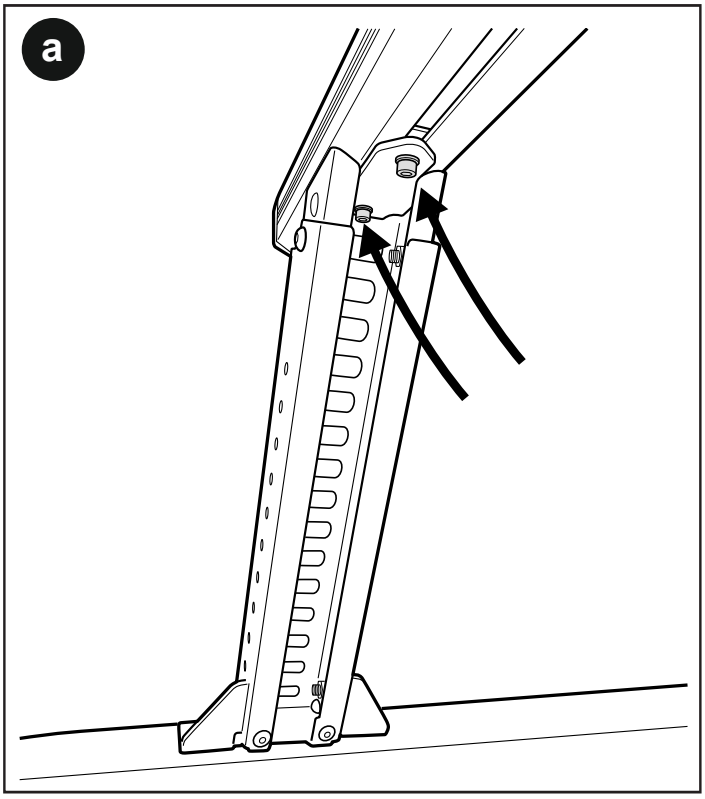

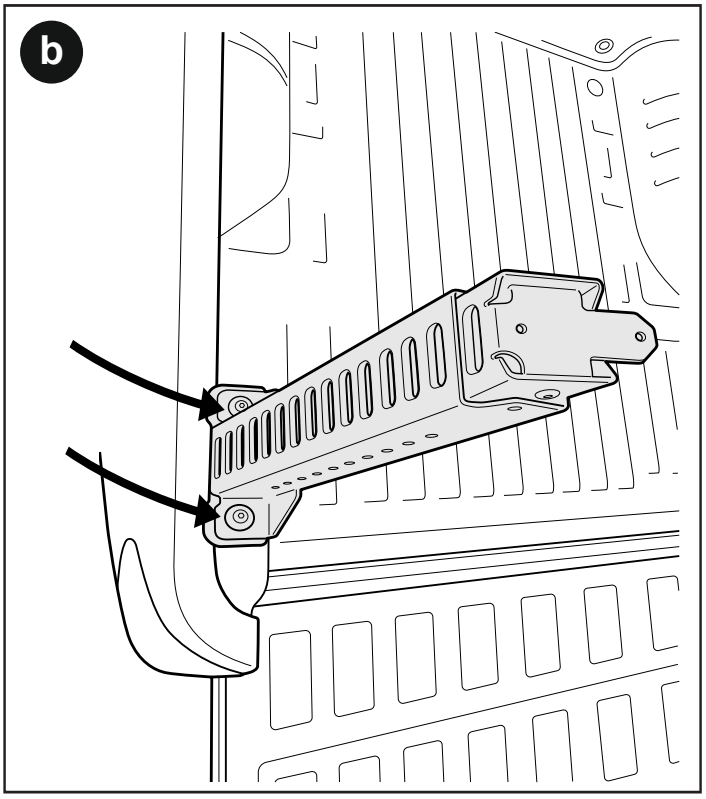

Position clamp behind the inner top lip of the bed rail and the **center elongated** hole of the side rail mounting brackets. Repeat to all 4 positions.

Ensure the M8 nut is in the indicated slot of the clamps.

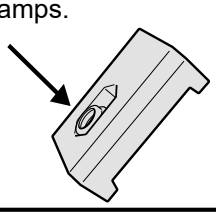

Fasten clamp loosely into position using M8 washer, M8 spring washer and M8 x 35mm bolt.

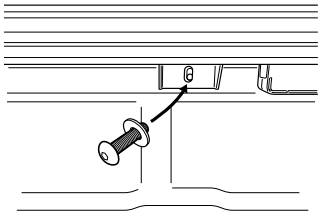

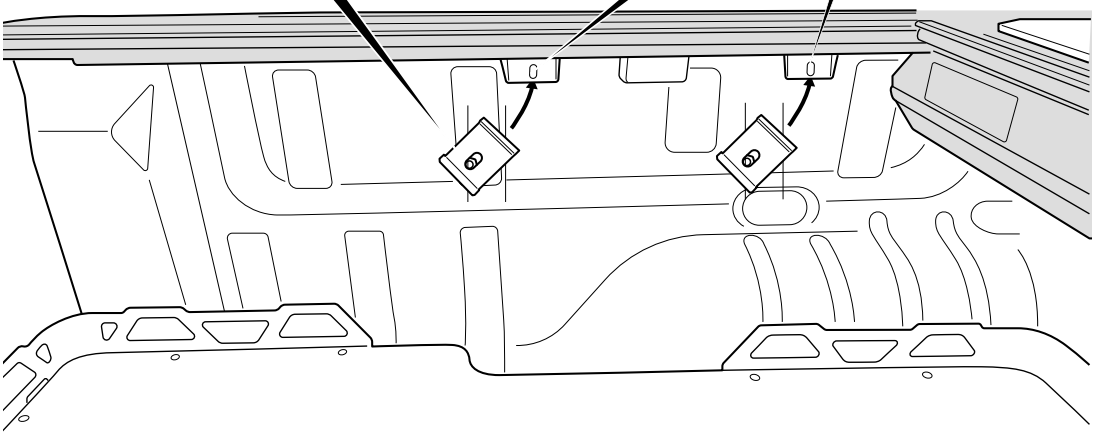

1. Apply downward pressure on side rails.
2. Lift **clamp** all the way up or as far up as possible then fasten clamp to 14Nm torque in the order indicated below.

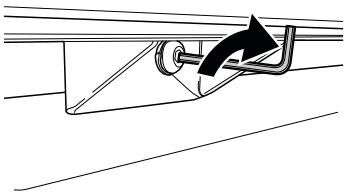

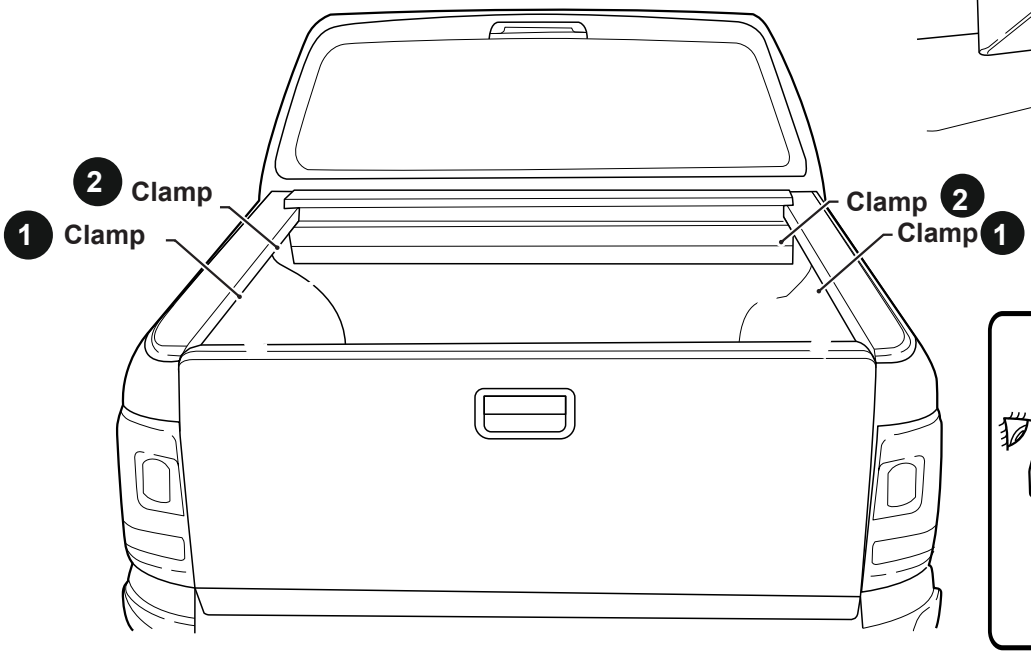

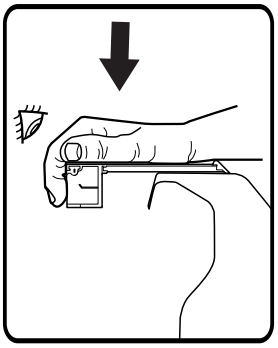

NOTE: The Load rack is rated to carry 60kg combined.
Exceeding the manufacturers recommended limit may cause issues and result to canceling of your warranty.

Please read the following disclaimer carefully before using our ladder racks. By using our ladder racks, you acknowledge and agree to the terms and conditions stated below.

Load Rack Ratings:
Our load rack system consists of a front rack and a rear rack, each with a maximum load capacity of 60kg. When the front and rear racks are coupled with the accessories bar, the combined load capacity is rated up to 150kg. These weight ratings apply solely to the racks themselves.

Vehicle Manufacturer's Guidelines:
It is essential to consult your vehicle manufacturer's guidelines to determine the permissible carrying capacity once our ladder racks are installed. The load-carrying capacity of your vehicle may vary, and it is crucial to adhere to the specific guidelines provided by the manufacturer. Please note that these guidelines may override the load capacity ratings of our ladder racks.

Consumer Guarantees:
Under the Australian Consumer Law, our ladder racks come with guarantees that cannot be excluded, including guarantees as to acceptable quality and fitness for purpose. You may be entitled to a replacement, repair, or refund if our ladder racks do not meet these guarantees. These consumer guarantees apply in addition to any other warranties or disclaimers stated in this disclaimer.

Limitation of Liability:
To the extent permitted by law, HSP (hereinafter referred to as "we," "our," or "us") will not be held liable for any damages or losses incurred to your vehicle or any third-party property as a result of using our ladder racks. It is the responsibility of the user to ensure that the load being carried is within the prescribed weight limits, securely fastened, and properly distributed.

Proper Installation and Usage:
We strongly recommend that you carefully follow the installation instructions provided with our ladder racks. Improper installation or usage may lead to instability, damage to your vehicle, or accidents. It is your responsibility to ensure that the ladder racks are correctly installed and used in accordance with the provided instructions.

Regular Inspections and Maintenance:
We advise conducting regular inspections of the ladder racks to check for any signs of wear, damage, or loose components. If any issues are detected, discontinue use immediately and seek professional assistance. Regular maintenance is essential to ensure the continued safe and proper functioning of the ladder racks.

Assumption of Risk:
By using our ladder racks, you acknowledge and accept the inherent risks associated with carrying loads on your vehicle. You assume all responsibility for any damages, injuries, or losses that may arise from the use of our ladder racks, whether directly or indirectly.

Tub Strengthening Requirements:
Please be aware that your vehicle manufacturer may require additional strengthening of the tub in certain cases. This responsibility falls on the user/purchaser, and it is crucial to comply with such requirements as specified by your vehicle manufacturer.

Please note that this disclaimer does not exclude, limit, or modify any rights or remedies available to you under the Australian Consumer Law or any other applicable legislation. If you have any questions or concerns regarding our ladder racks or your consumer rights, please contact us or seek independent legal advice.

If you do not agree with any part of this disclaimer or if any provision of this disclaimer is held to be invalid or unenforceable, the remaining provisions will continue in full force and effect.

If you have any questions or concerns regarding our ladder racks or this disclaimer, please contact us for further clarification.